# CITY OF MADISON

## CITY ENGINEERING DIVISION
## DEPARTMENT OF PUBLIC WORKS
## PLAN OF PROPOSED IMPROVEMENT

Madison, Wisconsin

### BUFFALO TRAIL, BARRON COURT, GREEN LAKE PASS ASSESSMENT DISTRICT - 2025

CITY PROJECT NO. 15123
CONTRACT NO. 8806

INDEX OF SHEETS


| | | |
|---|---|---|
| SHEET NO. | D1 | TYPICAL SECTIONS |
| SHEET NO. | D2 | DETAILS |
| SHEET NO. | EC1-EC5 | EROSION CONTROL PLANS |
| SHEET NO. | GI1-GI4 | GREEN INFRASTRUCTURE PLANS |
| SHEET NO. | PD1 | STREET PLAN DETAILS |
| SHEET NO. | P1-P6 | STREET PLAN & PROFILES |
| SHEET NO. | U1-U5 | UTILITY PLAN & PROFILES |
| SHEET NO. | U6 | SANITARY SEWER SCHEDULE |
| SHEET NO. | U7-U8 | STORM SEWER SCHEDULE |
| SHEET NO. | PM-1 | PAVEMENT MARKING PLAN |
| SHEET NO. | X1-X17 | CROSS SECTIONS |


CONVENTIONAL SIGNS
FIELD VERIFY ALL UTILITY LOCATIONS

| | |
|---|---|
| GAS | G |
| STORM SEWER | ST |
| SANITARY SEWER | SN |
| WATER | W |
| BURIED ELECTRIC | E |
| OVERHEAD ELECTRIC | OH |
| POWER POLE | |
| ADA COMPLIANT RAMP W/ DETECTABLE WARNING FIELD | |
| COMBUSTIBLE FLUIDS | |

NOTES:

- ALL GUTTERS SHALL DRAIN WITH A MINIMUM GRADE OF 0.50% TOWARD STORM SEWER INLETS.
- SIDEWALK RAMPS SHALL HAVE A MAXIMUM SLOPE OF 1" PER 12". SIDEWALK AND CURB RAMPS SHALL BE CONSTRUCTED WITH A SIDE SLOPE OF 2.00%. SIDEWALK SHALL HAVE A MINIMUM LONGITUDINAL SLOPE OF 0.50% AND A MAXIMUM LONGITUDINAL SLOPE OF 5.00% EXCEPT WHERE STREET GRADES EXCEED 5.00%.
- CITY MAINTENANCE PLAN NOT REQUIRED.

PROJECT LOCATION

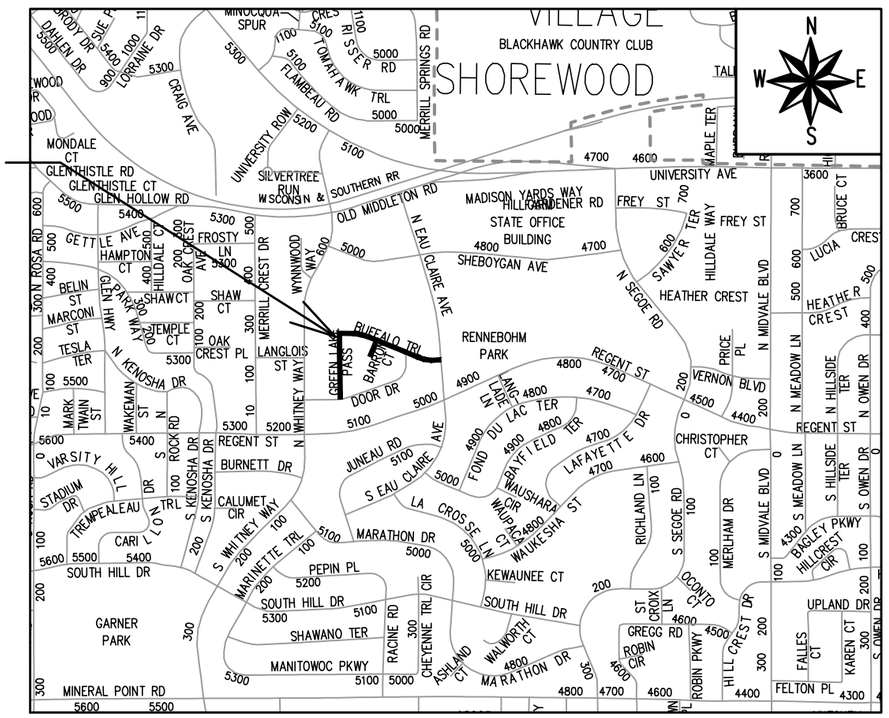


EARTH WORK SUMMARY:

EXCAVATION CUT (MEASURED PLAN QUANTITY) = 3,300 C.Y.
ESTIMATED UNDISTRIBUTED UNDERCUT = 300 C.Y.
TOTAL UNCLASSIFIED EXCAVATION CUT = 3,600 C.Y.

PUBLIC IMPROVEMENT PROJECT APPROVED

MAY 6, 2025

BY THE COMMON COUNCIL OF MADISON, WISCONSIN

PUBLIC IMPROVEMENT DESIGN APPROVED BY:

08/01/2025

City Engineer — Date

STREET DESIGNED BY:

WISCONSIN NICHOLAS L. JAECKELS E-50023 MCFARLAND WI PROFESSIONAL ENGINEER

08/01/2025

GREEN INFRASTRUCTURE DESIGNED BY:

WISCONSIN PHILIP D GAEBLER E-44568 MADISON WI PROFESSIONAL ENGINEER

08/01/2025

STORM SEWER DESIGNED BY:

WISCONSIN GREGORY T. FRIES E-30656 MADISON WI PROFESSIONAL ENGINEER

08/01/2025

PAVEMENT MARKING DESIGNED BY:

WISCONSIN SEAN D MALLOY E-48326 MADISON WI PROFESSIONAL ENGINEER

08/01/2025

SANITARY SEWER DESIGNED BY:

WISCONSIN MARK D. MODER E-33979 MADISON WI PROFESSIONAL ENGINEER

08/01/2025

SPECIAL NOTES:

- DETAIL NOT TO SCALE

- INSTALL AT 201 GREEN LAKE PASS AND 5114 BUFFALO TRAIL DRIVEWAY APRONS

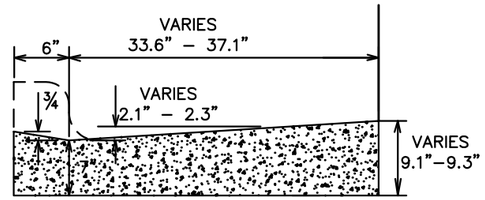


MODIFIED DRIVEWAY SECTION TYPE
'A' CONCRETE CURB & GUTTER
(PAY AS TYPE 'X' CURB AND GUTTER)

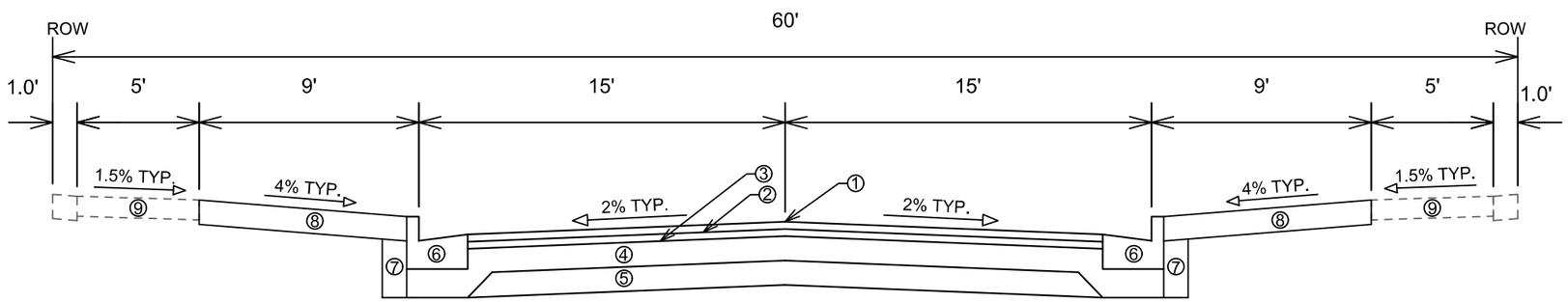


TYPICAL SECTION
BUFFALO TRAIL
STA 201+59.90 TO STA 211+74.69
BARRON COURT
STA 300+71.67 TO STA 302+52.39
GREEN LAKE PASS
STA 101+59.99 TO STA 107+96.14

SPECIAL NOTES:

- TYPICAL SECTION NOT TO SCALE

- SEE X-SHEETS FOR CROSS SLOPES, EDGE OF PAVEMENT ELEVATIONS, & TOP OF CURB ELEVATIONS

① POINT REFERRED TO ON PROFILE
② 1.75" HMA PAVEMENT, TYPE 4 LT 58-28 S (UPPER LAYER)
③ 1.75" HMA PAVEMENT, TYPE 4 LT 58-28 S (LOWER LAYER)
④ 6" GRADATION 2 CRUSHED AGGREGATE BASE COURSE (UPPER LAYER)
⑤ 6" GRADATION 1 CRUSHED AGGREGATE BASE COURSE (LOWER LAYER)
⑥ CONCRETE CURB AND GUTTER TYPE 'A'; DRIVEWAY (DWY) TYPE 'X'; PEDESTRIAN (PED) TYPE 'X'
⑦ FILL INCIDENTAL TO CURB AND GUTTER INSTALLATION
⑧ RESTORE DISTURBED AREAS W/ 6" TOPSOIL, SEED, AND EROSION MATTING
⑨ 5" CONCRETE SIDEWALK SPOT REPLACEMENT AS NEEDED, SEE PLAN DETAILS, PLAN AND PROFILE SHEETS FOR LOCATIONS

| MARK | REVISION | DATE | BY |
|---|---|---|---|
| --- | --- | --- | --- |
| --- | --- | --- | --- |
| --- | --- | --- | --- |
| --- | --- | --- | --- |

Designed By: NLJ | Date: 7/30/2025 10:23 AM | Scale: 1:6

15123

MADISON, WI

CONTRACT NO: 8806

TYPICAL SECTIONS

BUFFALO TRAIL, BARRON COURT, GREEN LAKE PASS

M:\DESIGN\Projects\15123\CAD\Streets\15123EN-Details.dwg

15123

D-1

Notes:

1. COLOR
   - BACKGROUND = ORANGE
   - MESSAGE = BLACK
   - BORDER = BLACK
2. LETTERING SERIES = C
3. MINIMUM SIGN REFLECTIVITY = HIGH INTENSITY PRISMATIC GRADE
4. SIGN MATERIAL MAY BE PLASTIC OR METAL
5. CONTRACTOR SHALL MAINTAIN SIGNS FOR DURATION OF PROJECT ATTACHED TO TYPE III BARRICADE

| MARK | REVISION | DATE | BY |
|---|---|---|---|
| -- | -- | -- | -- |
| -- | -- | -- | -- |
| -- | -- | -- | -- |
| -- | -- | -- | -- |

Designed By: NLJ | Date: 7/22/2025 8:13 AM | Scale: Custom | D-2

15123

MADISON, WI

CONTRACT NO: 8806

SIGN DETAIL

BUFFALO TRAIL, BARRON COURT, GREEN LAKE PASS

M:\DESIGN\Projects\15123\CAD\Traffic\15123TE-PavementMarking.dwg

15123

D-2

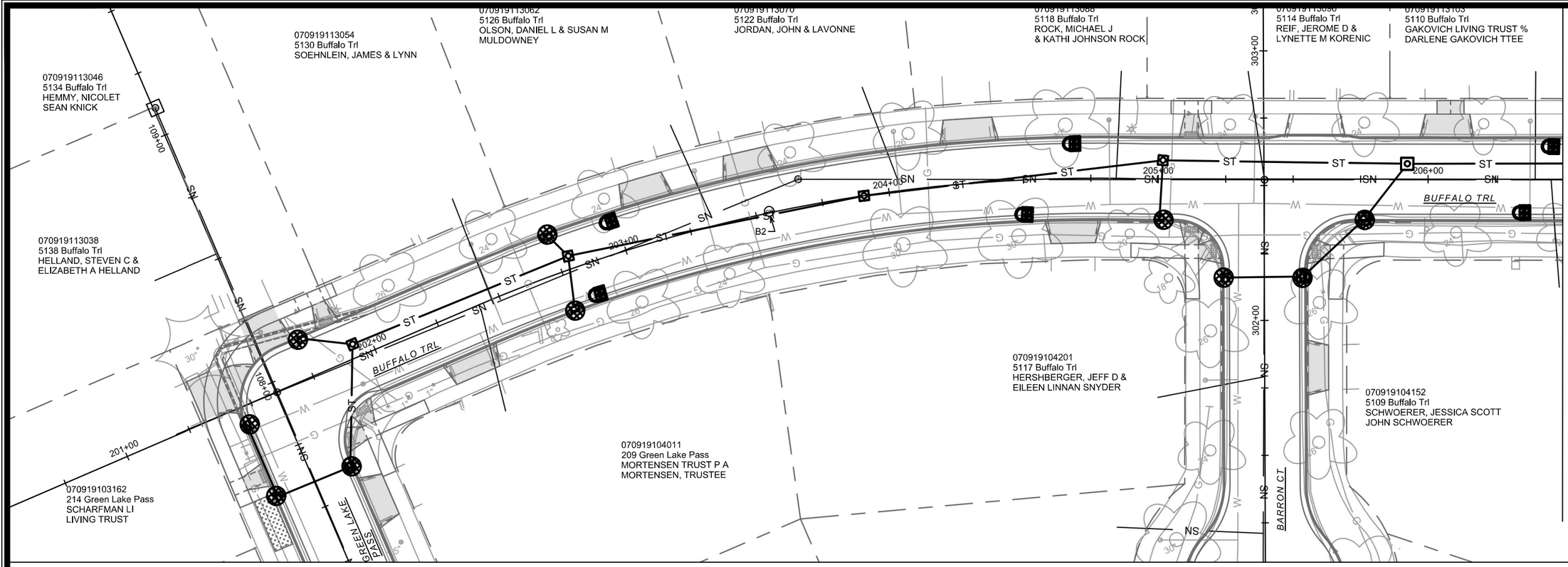


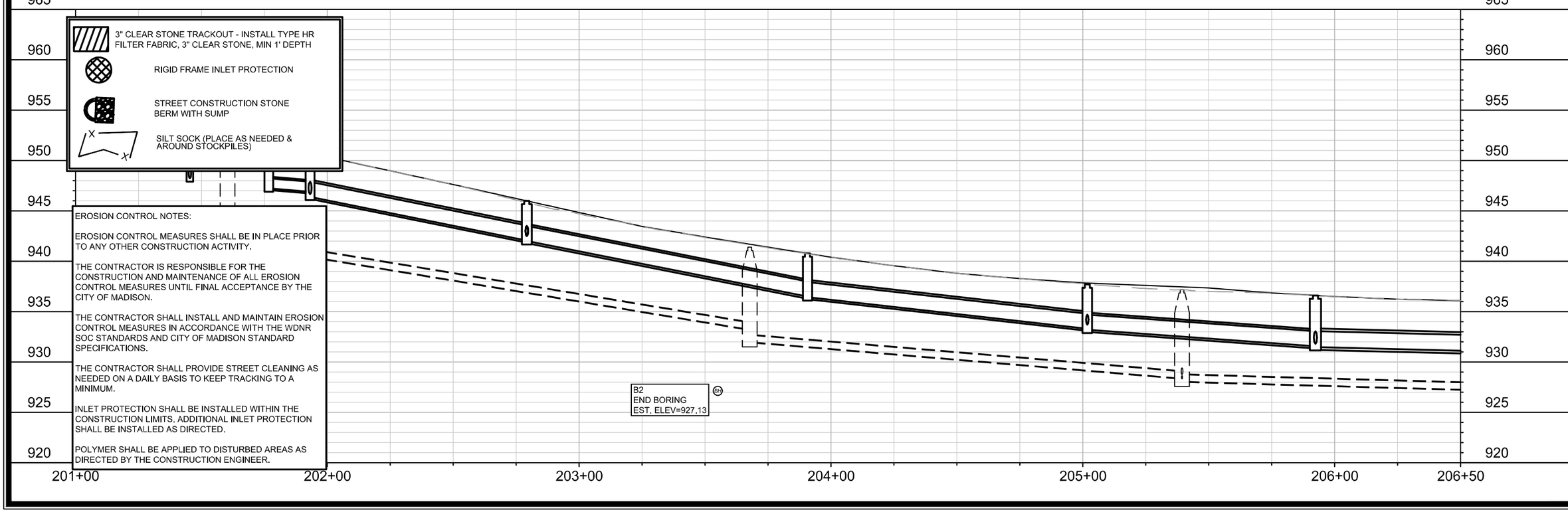


EROSION CONTROL NOTES:

EROSION CONTROL MEASURES SHALL BE IN PLACE PRIOR TO ANY OTHER CONSTRUCTION ACTIVITY.

THE CONTRACTOR IS RESPONSIBLE FOR THE CONSTRUCTION AND MAINTENANCE OF ALL EROSION CONTROL MEASURES UNTIL FINAL ACCEPTANCE BY THE CITY OF MADISON.

THE CONTRACTOR SHALL INSTALL AND MAINTAIN EROSION CONTROL MEASURES IN ACCORDANCE WITH THE WDNR SOC STANDARDS AND CITY OF MADISON STANDARD SPECIFICATIONS.

THE CONTRACTOR SHALL PROVIDE STREET CLEANING AS NEEDED ON A DAILY BASIS TO KEEP TRACKING TO A MINIMUM.

INLET PROTECTION SHALL BE INSTALLED WITHIN THE CONSTRUCTION LIMITS. ADDITIONAL INLET PROTECTION SHALL BE INSTALLED AS DIRECTED.

POLYMER SHALL BE APPLIED TO DISTURBED AREAS AS DIRECTED BY THE CONSTRUCTION ENGINEER.

| MARK | REVISION | DATE | BY |
|---|---|---|---|
| -- | -- | -- | -- |
| -- | -- | -- | -- |
| -- | -- | -- | -- |
| -- | -- | -- | -- |

Designed By: DAO | Date: 7/31/2025 10:33 AM | Scale: 1" = 40'

15123

MADISON, WI

8806

CONTRACT NO:

EROSION CONTROL - BUFFALO TRAIL

BUFFALO TRAIL, BARRON COURT, GREEN LAKE PASS

M:\DESIGN\Projects\15123\CAD\Sewers\15123SWR-PnP.dwg

15123

EC-1

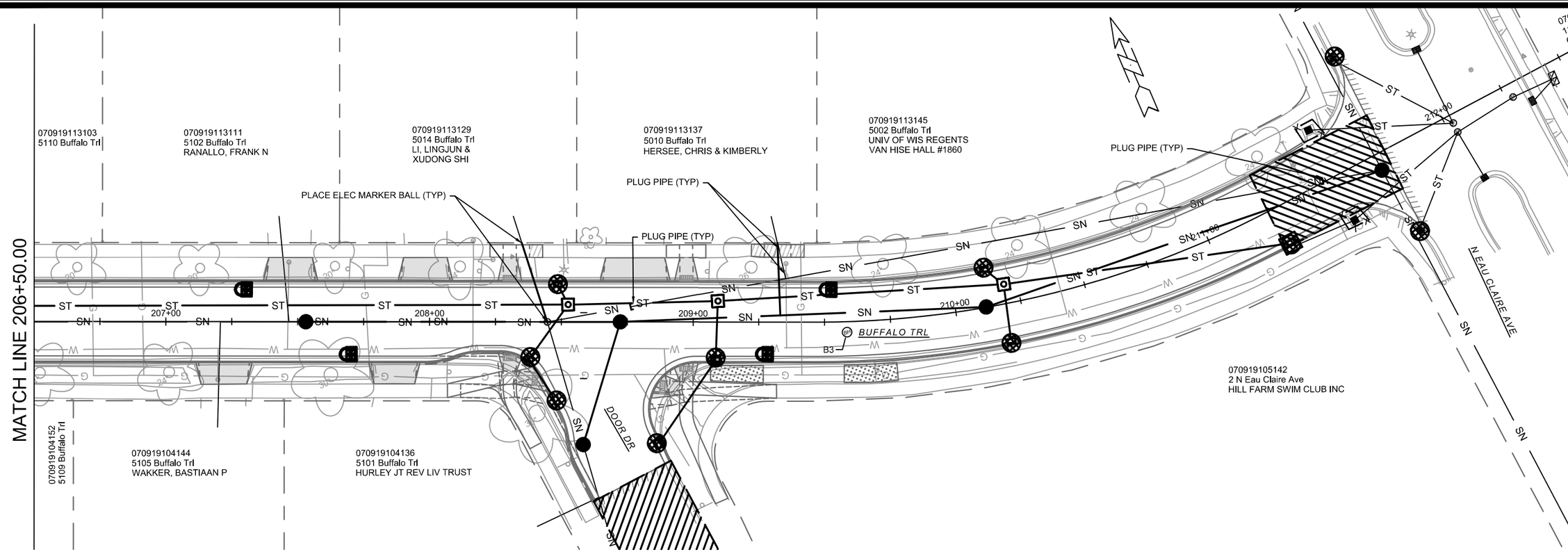


3" CLEAR STONE TRACKOUT - INSTALL TYPE HR FILTER FABRIC, 3" CLEAR STONE, MIN 1' DEPTH

RIGID FRAME INLET PROTECTION

STREET CONSTRUCTION STONE BERM WITH SUMP

SILT SOCK (PLACE AS NEEDED & AROUND STOCKPILES)

EROSION CONTROL NOTES:

EROSION CONTROL MEASURES SHALL BE IN PLACE PRIOR TO ANY OTHER CONSTRUCTION ACTIVITY.

THE CONTRACTOR IS RESPONSIBLE FOR THE CONSTRUCTION AND MAINTENANCE OF ALL EROSION CONTROL MEASURES UNTIL FINAL ACCEPTANCE BY THE CITY OF MADISON.

THE CONTRACTOR SHALL INSTALL AND MAINTAIN EROSION CONTROL MEASURES IN ACCORDANCE WITH THE WDNR SOC STANDARDS AND CITY OF MADISON STANDARD SPECIFICATIONS.

THE CONTRACTOR SHALL PROVIDE STREET CLEANING AS NEEDED ON A DAILY BASIS TO KEEP TRACKING TO A MINIMUM.

INLET PROTECTION SHALL BE INSTALLED WITHIN THE CONSTRUCTION LIMITS. ADDITIONAL INLET PROTECTION SHALL BE INSTALLED AS DIRECTED.

POLYMER SHALL BE APPLIED TO DISTURBED AREAS AS DIRECTED BY THE CONSTRUCTION ENGINEER.

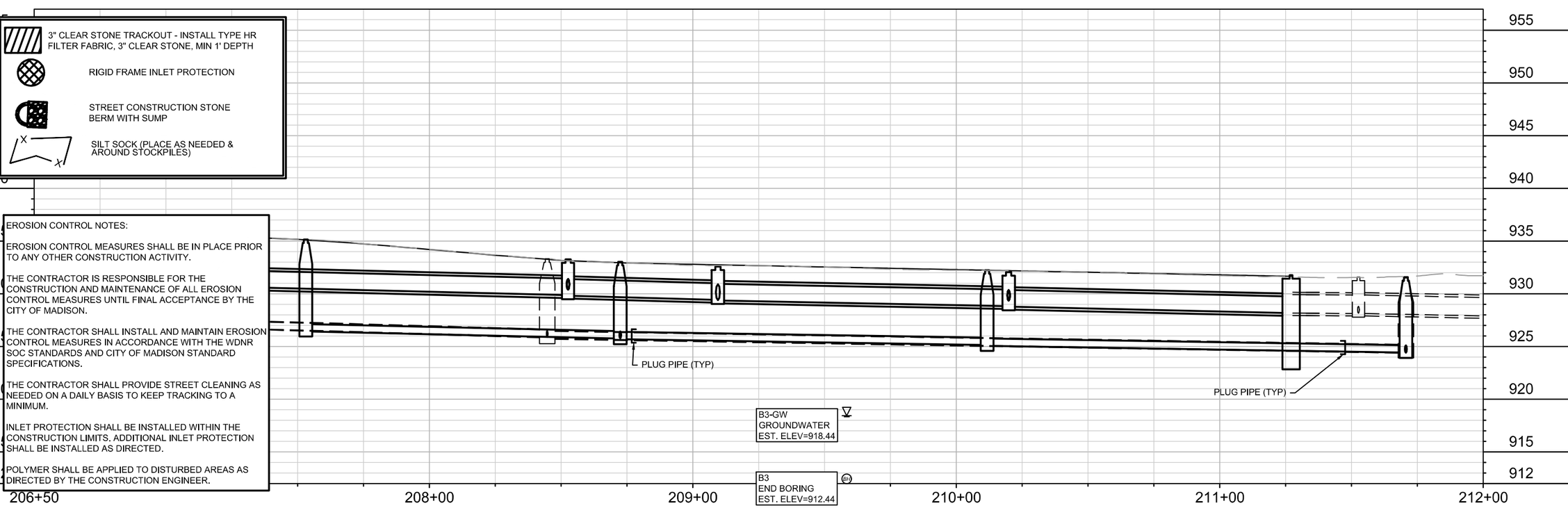


| MARK | REVISION | DATE | BY |
|---|---|---|---|
| --- | --- | --- | --- |
| --- | --- | --- | --- |
| --- | --- | --- | --- |
| --- | --- | --- | --- |

Designed By: DAO | Date: 7/31/2025 10:10 AM | Scale: 1" = 40'

15123 | EC-2

15123

MADISON, WI

8806

CONTRACT NO:

EROSION CONTROL - BUFFALO TRAIL

BUFFALO TRAIL, BARRON COURT, GREEN LAKE PASS

M:\DESIGN\Projects\15123\CAD\Sewers\15123SWR-PnP.dwg

15123

EC-2

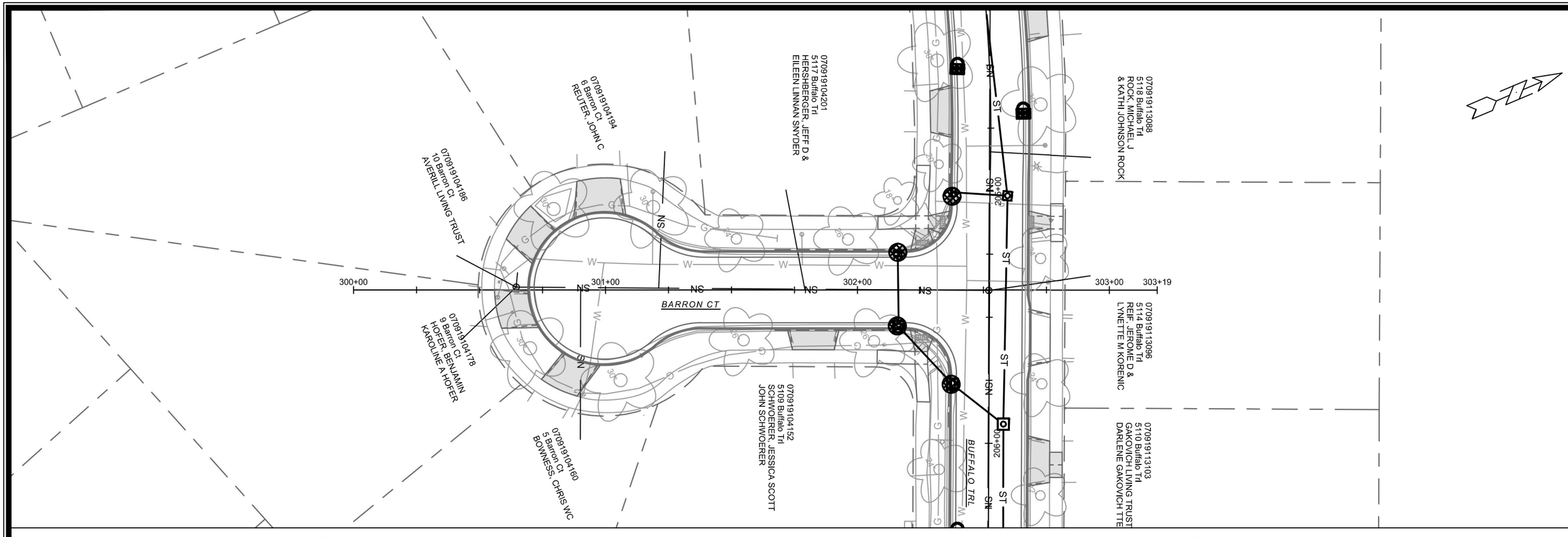


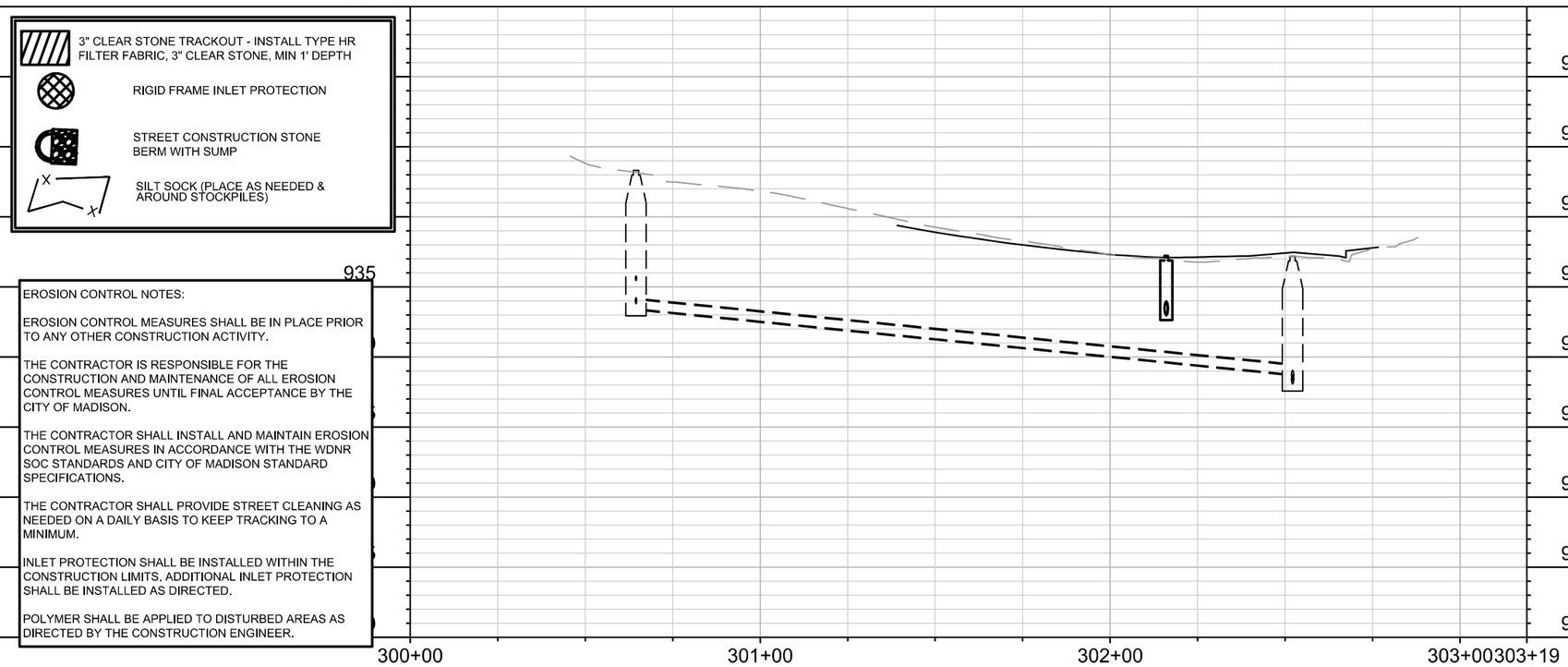


EROSION CONTROL NOTES:

EROSION CONTROL MEASURES SHALL BE IN PLACE PRIOR TO ANY OTHER CONSTRUCTION ACTIVITY.

THE CONTRACTOR IS RESPONSIBLE FOR THE CONSTRUCTION AND MAINTENANCE OF ALL EROSION CONTROL MEASURES UNTIL FINAL ACCEPTANCE BY THE CITY OF MADISON.

THE CONTRACTOR SHALL INSTALL AND MAINTAIN EROSION CONTROL MEASURES IN ACCORDANCE WITH THE WDNR SOC STANDARDS AND CITY OF MADISON STANDARD SPECIFICATIONS.

THE CONTRACTOR SHALL PROVIDE STREET CLEANING AS NEEDED ON A DAILY BASIS TO KEEP TRACKING TO A MINIMUM.

INLET PROTECTION SHALL BE INSTALLED WITHIN THE CONSTRUCTION LIMITS. ADDITIONAL INLET PROTECTION SHALL BE INSTALLED AS DIRECTED.

POLYMER SHALL BE APPLIED TO DISTURBED AREAS AS DIRECTED BY THE CONSTRUCTION ENGINEER.

| MARK | REVISION | DATE | BY |
|---|---|---|---|
| --- | --- | --- | --- |
| --- | --- | --- | --- |
| --- | --- | --- | --- |
| --- | --- | --- | --- |

Designed By: DAO | Date: 7/31/2025 10:11 AM | Scale: 1" = 40'

15123

15123

MADISON, WI

CONTRACT NO: 8806

EROSION CONTROL - BARRON COURT

BUFFALO TRAIL, BARRON COURT, GREEN LAKE PASS

M:\DESIGN\Projects\15123\CAD\Sewers\15123SWR-PnP.dwg

15123

EC-3

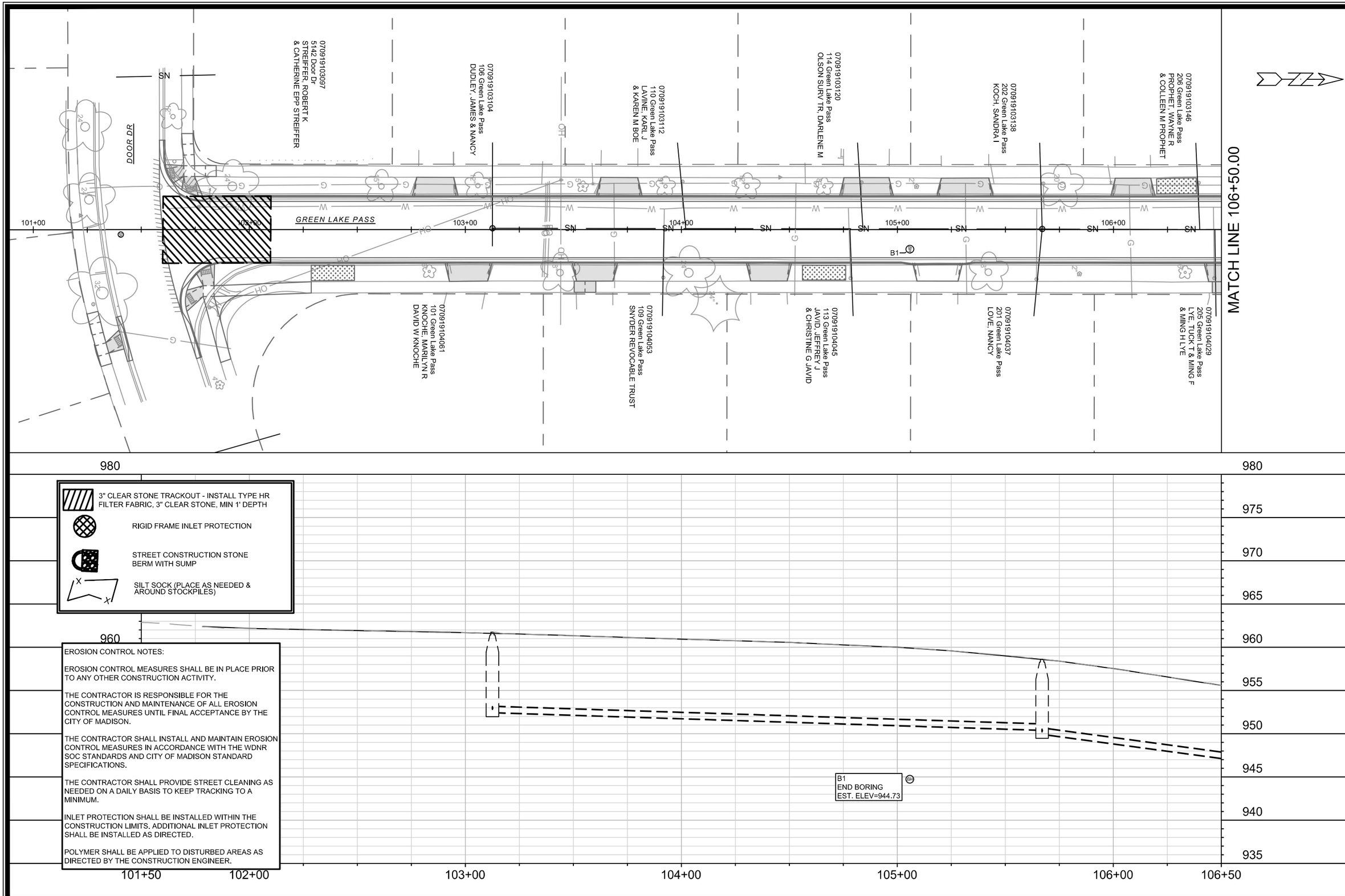


EROSION CONTROL NOTES:

EROSION CONTROL MEASURES SHALL BE IN PLACE PRIOR TO ANY OTHER CONSTRUCTION ACTIVITY.

THE CONTRACTOR IS RESPONSIBLE FOR THE CONSTRUCTION AND MAINTENANCE OF ALL EROSION CONTROL MEASURES UNTIL FINAL ACCEPTANCE BY THE CITY OF MADISON.

THE CONTRACTOR SHALL INSTALL AND MAINTAIN EROSION CONTROL MEASURES IN ACCORDANCE WITH THE WDNR SOC STANDARDS AND CITY OF MADISON STANDARD SPECIFICATIONS.

THE CONTRACTOR SHALL PROVIDE STREET CLEANING AS NEEDED ON A DAILY BASIS TO KEEP TRACKING TO A MINIMUM.

INLET PROTECTION SHALL BE INSTALLED WITHIN THE CONSTRUCTION LIMITS. ADDITIONAL INLET PROTECTION SHALL BE INSTALLED AS DIRECTED.

POLYMER SHALL BE APPLIED TO DISTURBED AREAS AS DIRECTED BY THE CONSTRUCTION ENGINEER.

| MARK | REVISION | DATE | BY |
|---|---|---|---|
| -- | -- | -- | -- |
| -- | -- | -- | -- |
| -- | -- | -- | -- |
| -- | -- | -- | -- |

Designed By: DAO | Date: 7/31/2025 10:11 AM | Scale: 1" = 40'

15123

EROSION CONTROL - GREEN LAKE PASS

BUFFALO TRAIL, BARRON COURT, GREEN LAKE PASS

M:\DESIGN\Projects\15123\CAD\Sewers\15123SWR-PnP.dwg

MADISON, WI

CONTRACT NO: 8806

15123

EC-4

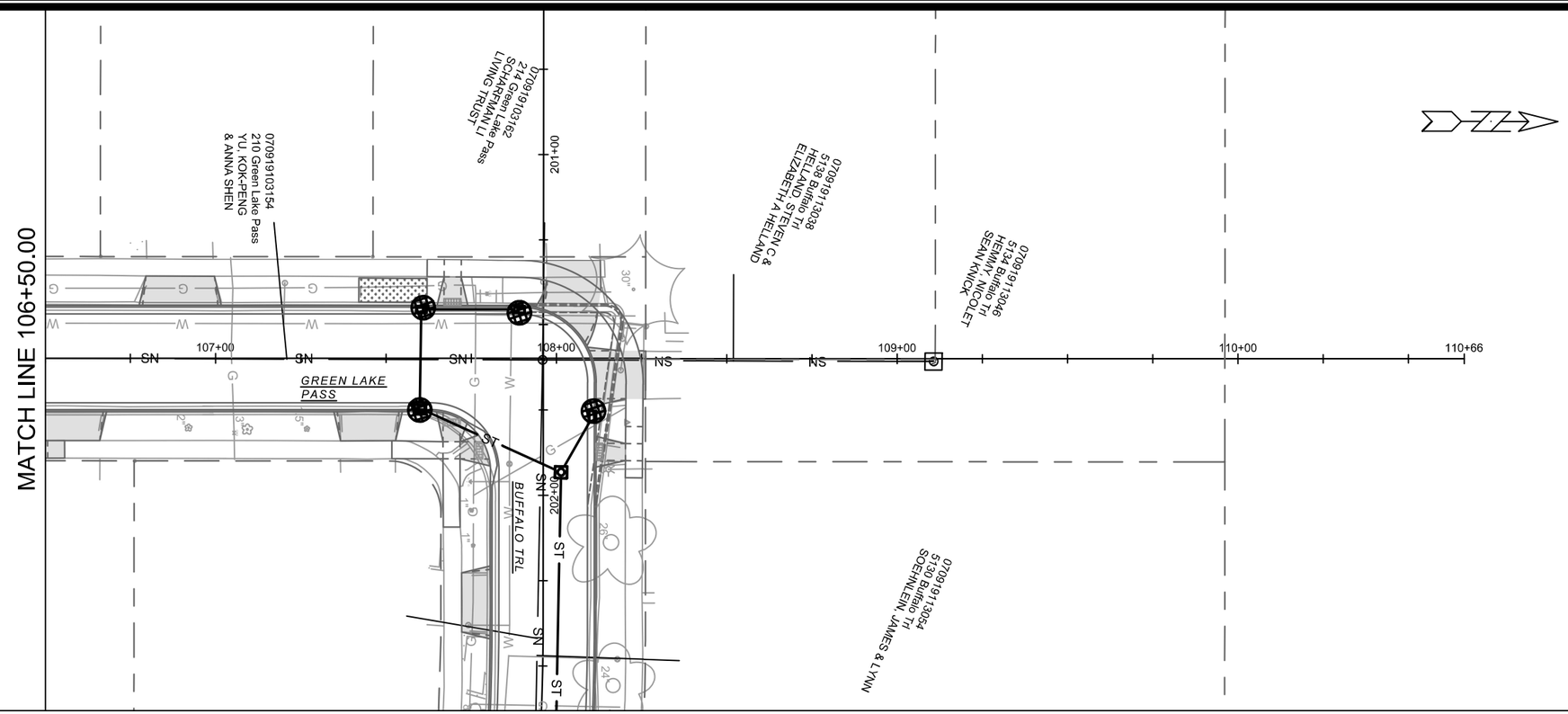

3" CLEAR STONE TRACKOUT - INSTALL TYPE HR FILTER FABRIC, 3" CLEAR STONE, MIN 1' DEPTH

RIGID FRAME INLET PROTECTION

STREET CONSTRUCTION STONE BERM WITH SUMP

SILT SOCK (PLACE AS NEEDED & AROUND STOCKPILES)

EROSION CONTROL NOTES:

EROSION CONTROL MEASURES SHALL BE IN PLACE PRIOR TO ANY OTHER CONSTRUCTION ACTIVITY.

THE CONTRACTOR IS RESPONSIBLE FOR THE CONSTRUCTION AND MAINTENANCE OF ALL EROSION CONTROL MEASURES UNTIL FINAL ACCEPTANCE BY THE CITY OF MADISON.

THE CONTRACTOR SHALL INSTALL AND MAINTAIN EROSION CONTROL MEASURES IN ACCORDANCE WITH THE WDNR SOC STANDARDS AND CITY OF MADISON STANDARD SPECIFICATIONS.

THE CONTRACTOR SHALL PROVIDE STREET CLEANING AS NEEDED ON A DAILY BASIS TO KEEP TRACKING TO A MINIMUM.

INLET PROTECTION SHALL BE INSTALLED WITHIN THE CONSTRUCTION LIMITS. ADDITIONAL INLET PROTECTION SHALL BE INSTALLED AS DIRECTED.

POLYMER SHALL BE APPLIED TO DISTURBED AREAS AS DIRECTED BY THE CONSTRUCTION ENGINEER.

| MARK | REVISION | DATE | BY |
|---|---|---|---|
| --- | --- | --- | --- |
| --- | --- | --- | --- |
| --- | --- | --- | --- |
| --- | --- | --- | --- |

Designed By: DAO | Date: 7/31/2025 10:11 AM | Scale: 1" = 40'

15123

15123

EROSION CONTROL - GREEN LAKE PASS

BUFFALO TRAIL, BARRON COURT, GREEN LAKE PASS

MADISON, WI

CONTRACT NO: 8806

M:\DESIGN\Projects\15123\CAD\Sewers\15123SWR-PnP.dwg

15123

EC-5

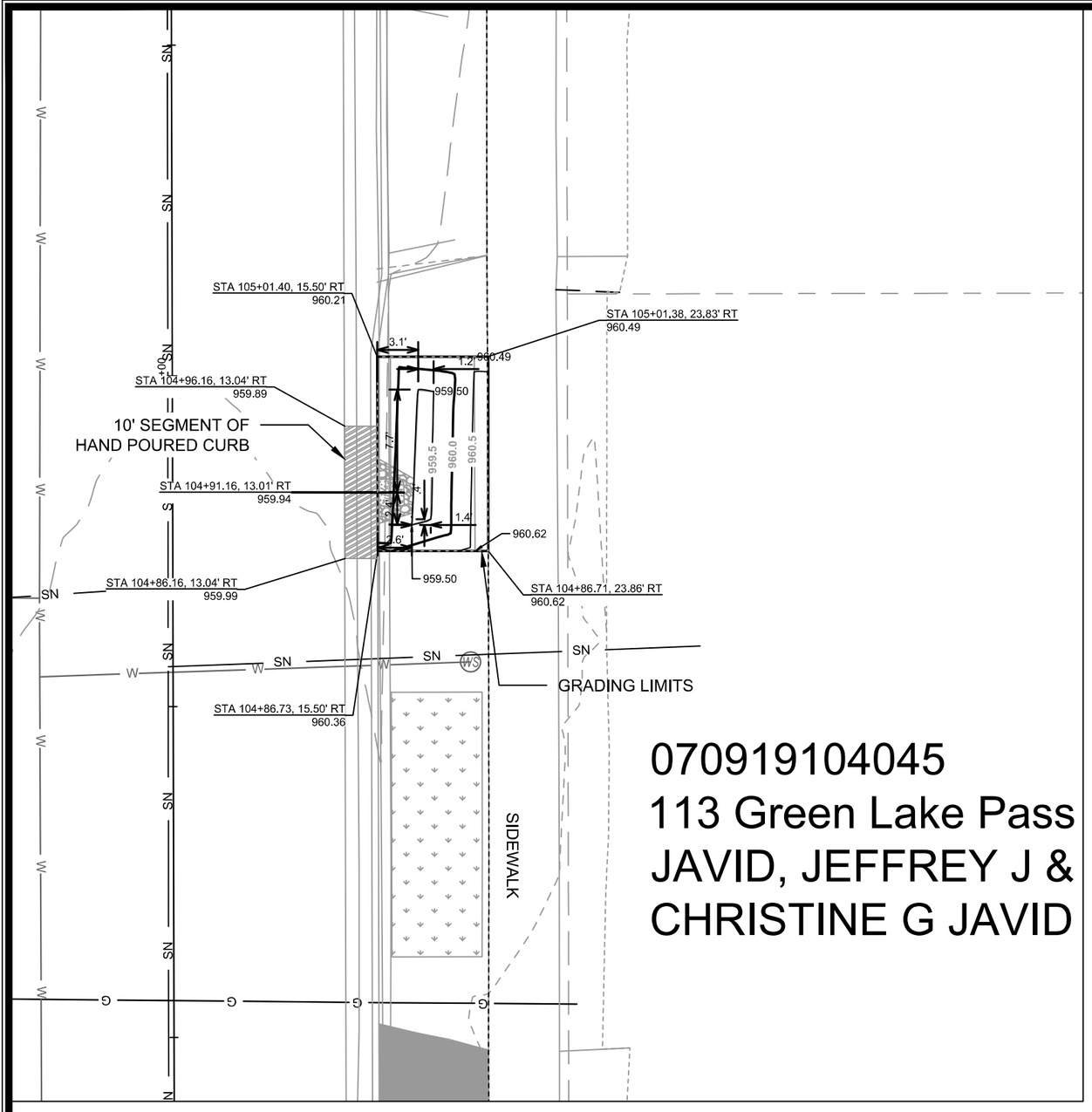


070919104045
113 Green Lake Pass
JAVID, JEFFREY J &
CHRISTINE G JAVID

GREEN LAKE PASS ALIGNMENT

0 5 10 Feet

# DETAIL POINT ELEVATIONS/DESCRIPTIONS

| | | Pond depth (inches) | 4 |
|---|---|---|---|
| Point | Point Description | Distance from Existing FlowLine (ft) | Elevation |
| | Ex. EOG at CL of Flume | +0.125 | 959.95 |
| A | Ex. Flow Line at CL of Flume | 0 | 959.83 |
| B | Pro. Gutter Flow Line at CL of Flume | -0.17 | 959.66 |
| C | Edge of Flume @ Gutter (Uphill) | varies | 959.86 |
| D | Edge of Flume @ Gutter (Downhill) | varies | 959.82 |
| E | Bottom of Flume at CL | varies | 959.49 |
| F | Bottom of Stone/Pond | varies | 959.49 |
| G | Edge of Flume @ Bottom of Basin (Uphill) | varies | 959.69 |
| H | Edge of Flume @ Bottom of Basin (Downhill) | varies | 959.65 |

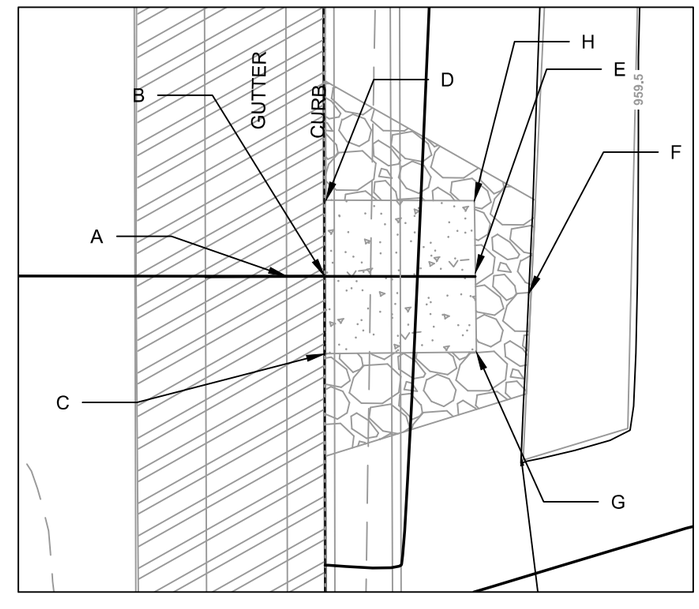


CURB CUT/FLUME TYP. DETAIL

0 2 4 Feet

NOTES:
1. ALL AREAS WITHIN GRADING LIMITS TO RECEIVE CLASS I, TYPE A - ORGANIC EROSION CONTROL MATTING IF COMPLETED OUTSIDE OF GROWING SEASONS, SEE SPECIAL PROVISIONS
2. DO NOT SEED WITHIN SIDE SLOPES OR BOTTOM OF BASIN.
3. SEE DETAIL D-1 AND D-2.

| MARK | REVISION | DATE | BY |
|---|---|---|---|
| - | - | - | - |
| - | - | - | - |
| - | - | - | - |

Designed By: PDG | Date: 7/31/2025 3:38 PM | Scale: | GI-1
15123

15123
MADISON, WI
8785
CONTRACT NO:

RAINGARDEN DETAIL - 113 GREEN LAKE PASS
BUFFALO TRAIL, BARRON COURT, GREEN LAKE PASS
M:\DESIGN\Projects\15123\CAD\Sewers\15123SWR-GI.dwg

CITY OF MADISON WISCONSIN

15123
GI-1

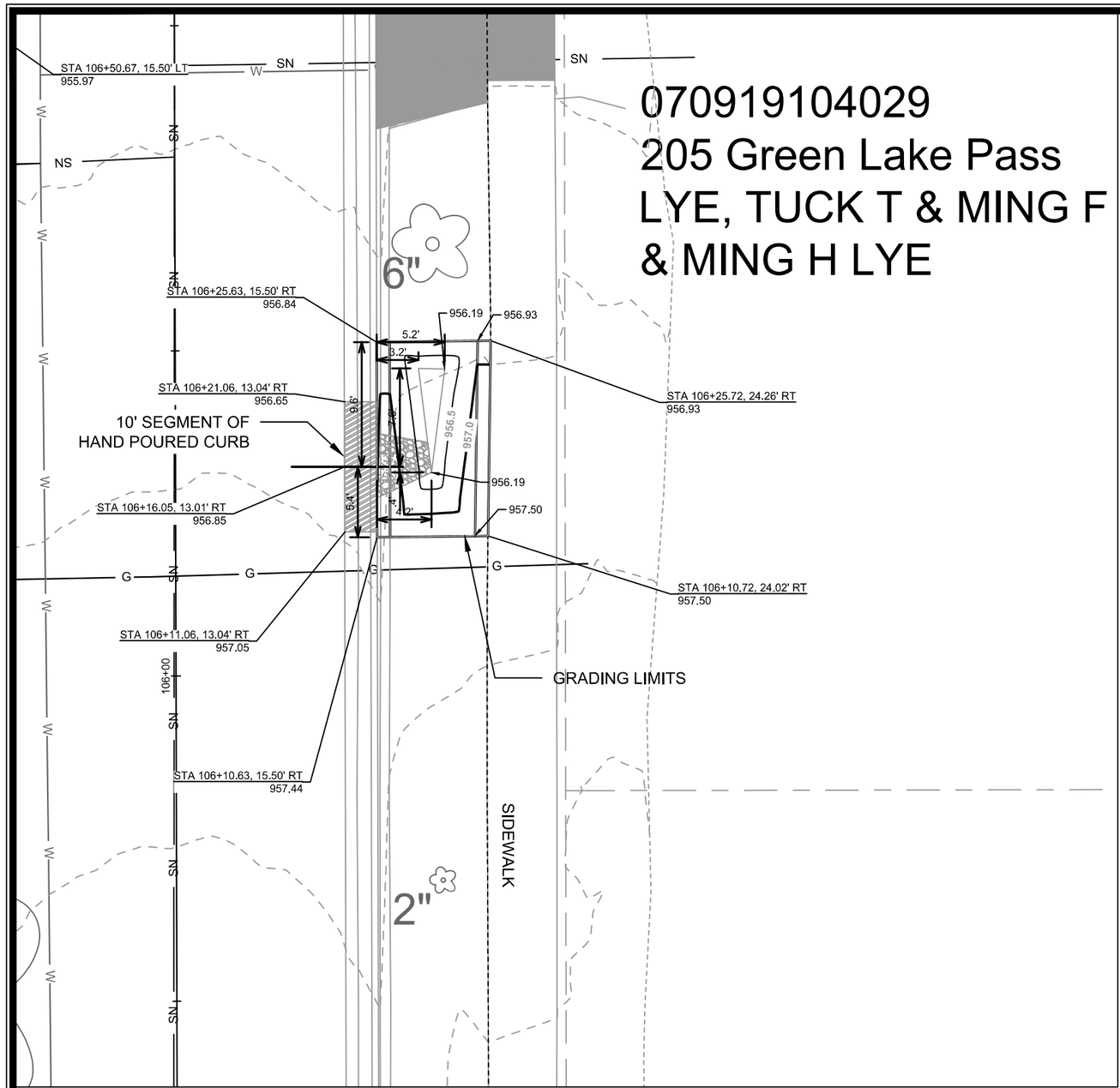


GREEN LAKE PASS ALIGNMENT

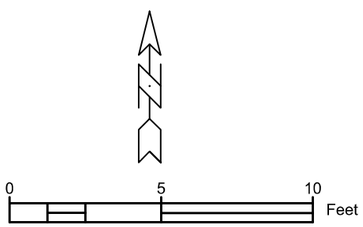


# DETAIL POINT ELEVATIONS/DESCRIPTIONS

| | | Pond depth (inches) | 6 |
|---|---|---|---|
| Point | Point Description | Distance from Existing FlowLine (ft) | Elevation |
| | Ex. EOG at CL of Flume | +0.125 | 956.85 |
| A | Ex. Flow Line at CL of Flume | 0 | 956.73 |
| B | Pro. Gutter Flow Line at CL of Flume | -0.17 | 956.56 |
| C | Edge of Flume @ Gutter (Uphill) | varies | 956.89 |
| D | Edge of Flume @ Gutter (Downhill) | varies | 956.69 |
| E | Bottom of Flume at CL | varies | 956.39 |
| F | Bottom of Stone/Pond | varies | 956.19 |
| G | Edge of Flume @ Bottom of Basin (Uphill) | varies | 956.72 |
| H | Edge of Flume @ Bottom of Basin (Downhill) | varies | 956.52 |

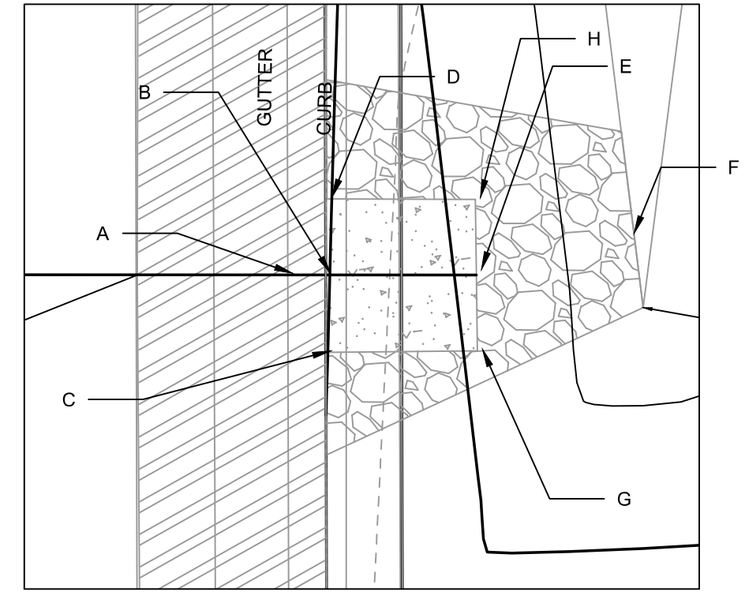


CURB CUT/FLUME TYP. DETAIL

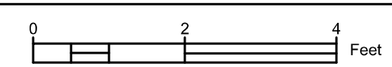


NOTES:
1. ALL AREAS WITHIN GRADING LIMITS TO RECEIVE CLASS I, TYPE A - ORGANIC EROSION CONTROL MATTING IF COMPLETED OUTSIDE OF GROWING SEASONS, SEE SPECIAL PROVISIONS
2. DO NOT SEED WITHIN SIDE SLOPES OR BOTTOM OF BASIN.
3. SEE DETAIL D-1 AND D-2.

| MARK | REVISION | DATE | BY |
|---|---|---|---|
| - | - | - | - |
| - | - | - | - |
| - | - | - | - |

Designed By: PDG | Date: 7/31/2025 3:39 PM | Scale: | GI-2
15123

15123
MADISON, WI
8785
CONTRACT NO:

RAINGARDEN DETAIL - 205 GREEN LAKE PASS
BUFFALO TRAIL, BARRON COURT, GREEN LAKE PASS
M:\DESIGN\Projects\15123\CAD\Sewers\15123SWR-GI.dwg

15123
GI-2

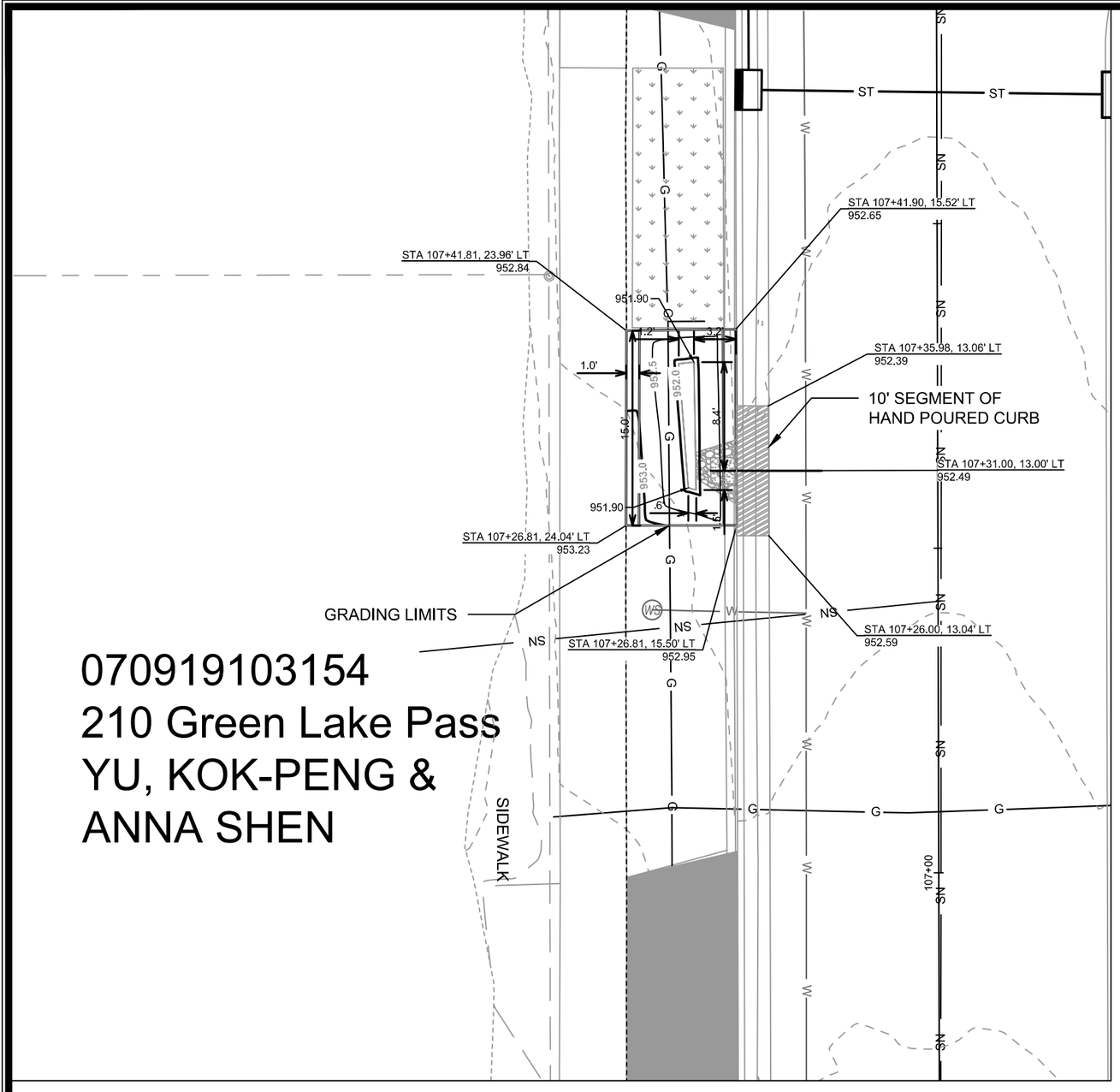


070919103154
210 Green Lake Pass
YU, KOK-PENG &
ANNA SHEN

GREEN LAKE PASS ALIGNMENT

0 5 10 Feet

# DETAIL POINT ELEVATIONS/DESCRIPTIONS

| | | Pond depth (inches) | 6 |
|---|---|---|---|
| Point | Point Description | Distance from Existing FlowLine (ft) | Elevation |
| | Ex. EOG at CL of Flume | +0.125 | 952.49 |
| A | Ex. Flow Line at CL of Flume | 0 | 952.37 |
| B | Pro. Gutter Flow Line at CL of Flume | -0.17 | 952.20 |
| C | Edge of Flume @ Gutter (Uphill) | varies | 952.45 |
| D | Edge of Flume @ Gutter (Downhill) | varies | 952.35 |
| E | Bottom of Flume at CL | varies | 952.03 |
| F | Bottom of Stone/Pond | varies | 951.90 |
| G | Edge of Flume @ Bottom of Basin (Uphill) | varies | 952.28 |
| H | Edge of Flume @ Bottom of Basin (Downhill) | varies | 952.18 |

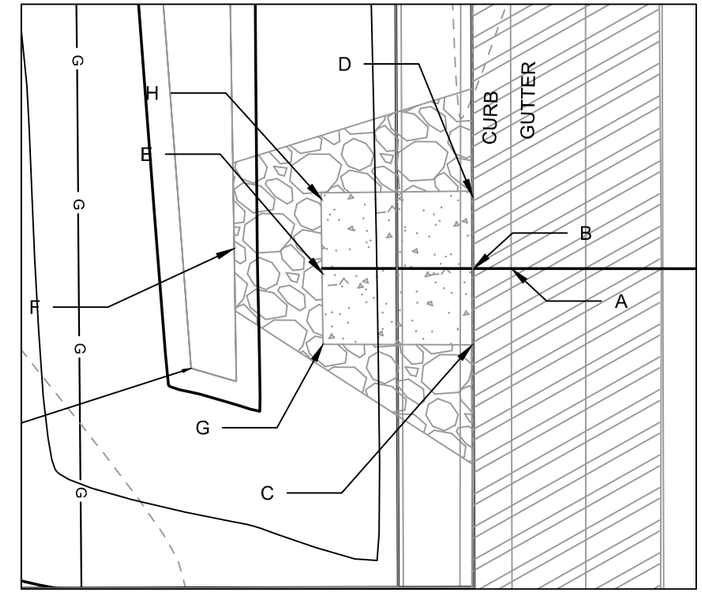


CURB CUT/FLUME TYP. DETAIL

0 2 4 Feet

NOTES:
1. ALL AREAS WITHIN GRADING LIMITS TO RECEIVE CLASS I, TYPE A - ORGANIC EROSION CONTROL MATTING IF COMPLETED OUTSIDE OF GROWING SEASONS, SEE SPECIAL PROVISIONS
2. DO NOT SEED WITHIN SIDE SLOPES OR BOTTOM OF BASIN.
3. SEE DETAIL D-1 AND D-2.

| MARK | REVISION | DATE | BY |
|---|---|---|---|
| | | | |

Designed By: PDG | Date: 7/31/2025 3:39 PM | Scale:

15123

GI-3

15123

MADISON, WI 8785

CONTRACT NO:

RAINGARDEN DETAIL - 210 GREEN LAKE PASS

BUFFALO TRAIL, BARRON COURT, GREEN LAKE PASS

M:\DESIGN\Projects\15123\CAD\Sewers\15123SWR-GI.dwg

15123

GI-3

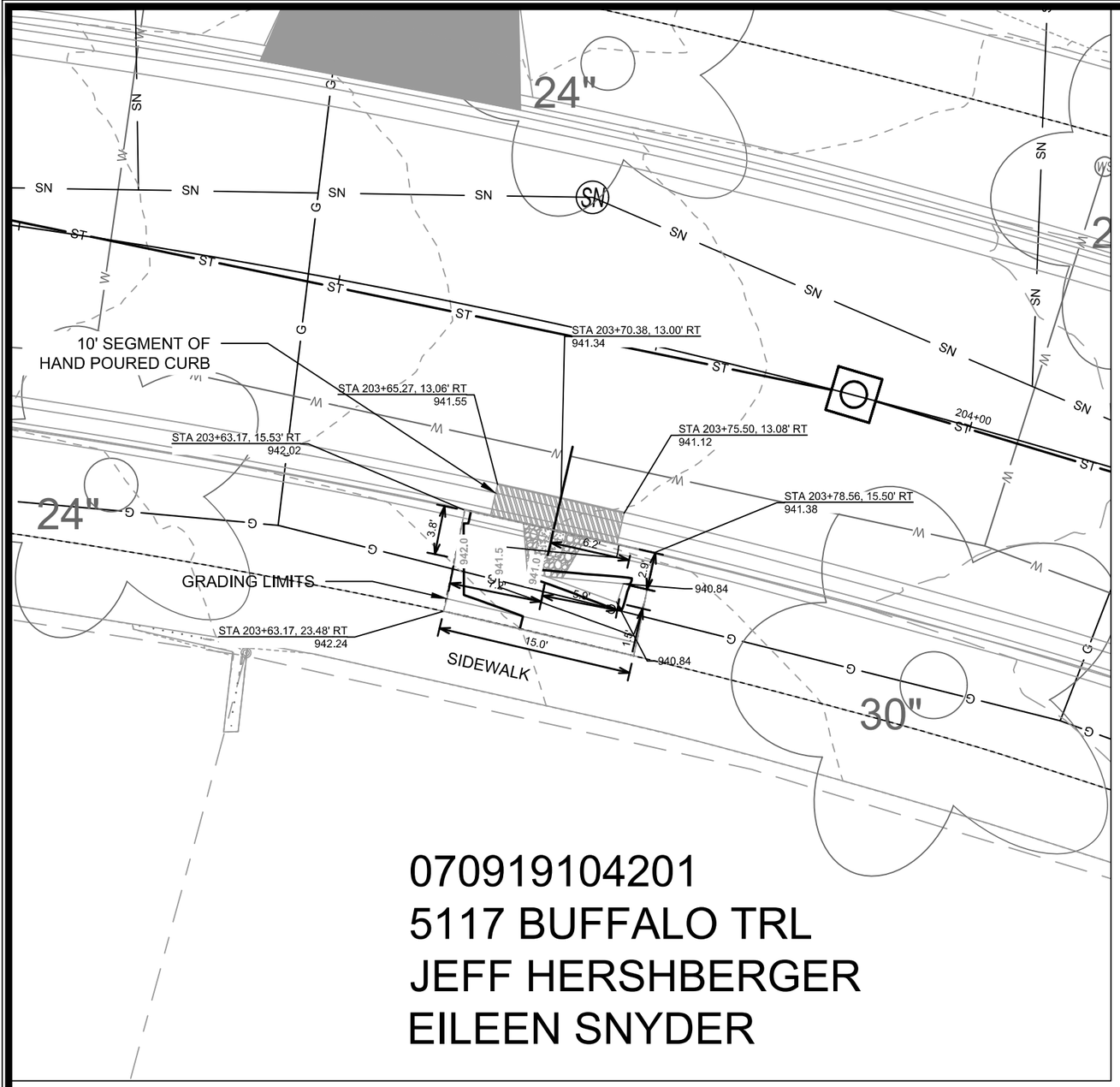


BUFFALO TRAIL ALIGNMENT

0 5 10 Feet

# DETAIL POINT ELEVATIONS/DESCRIPTIONS

| | | Pond depth (inches) | 4 |
|---|---|---|---|
| Point | Point Description | Distance from Existing FlowLine (ft) | Elevation |
| | Ex. EOG at CL of Flume | +0.125 | 941.34 |
| A | Ex. Flow Line at CL of Flume | 0 | 941.22 |
| B | Pro. Gutter Flow Line at CL of Flume | -0.17 | 941.05 |
| C | Edge of Flume @ Gutter (Uphill) | varies | 941.38 |
| D | Edge of Flume @ Gutter (Downhill) | varies | 941.17 |
| E | Bottom of Flume at CL | varies | 940.88 |
| F | Bottom of Stone/Pond | varies | 940.84 |
| G | Edge of Flume @ Bottom of Basin (Uphill) | varies | 941.22 |
| H | Edge of Flume @ Bottom of Basin (Downhill) | varies | 941.00 |

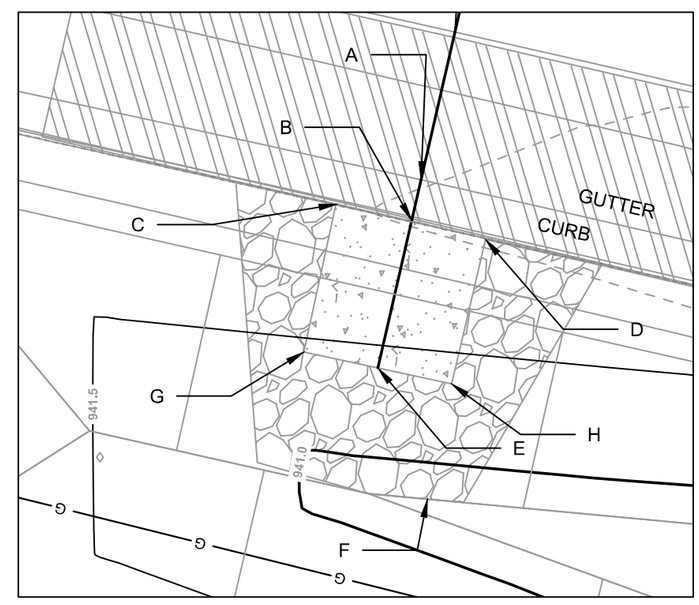


CURB CUT/FLUME TYP. DETAIL

0 2 4 Feet

NOTES:
1. ALL AREAS WITHIN GRADING LIMITS TO RECEIVE CLASS I, TYPE A - ORGANIC EROSION CONTROL MATTING IF COMPLETED OUTSIDE OF GROWING SEASONS, SEE SPECIAL PROVISIONS
2. DO NOT SEED WITHIN SIDE SLOPES OR BOTTOM OF BASIN.
3. SEE DETAIL D-1 AND D-2.

| MARK | REVISION | DATE | BY |
|---|---|---|---|
| - | - | - | - |
| - | - | - | - |
| - | - | - | - |

Designed By: PDG | Date: 7/31/2025 3:39 PM | Scale: | GI-4

15123

MADISON, WI 8785

CONTRACT NO:

RAINGARDEN DETAIL - 5117 BUFFALO TRAIL

BUFFALO TRAIL, BARRON COURT, GREEN LAKE PASS

M:\DESIGN\Projects\15123\CAD\Sewers\15123SWR-GI.dwg

15123

GI-4

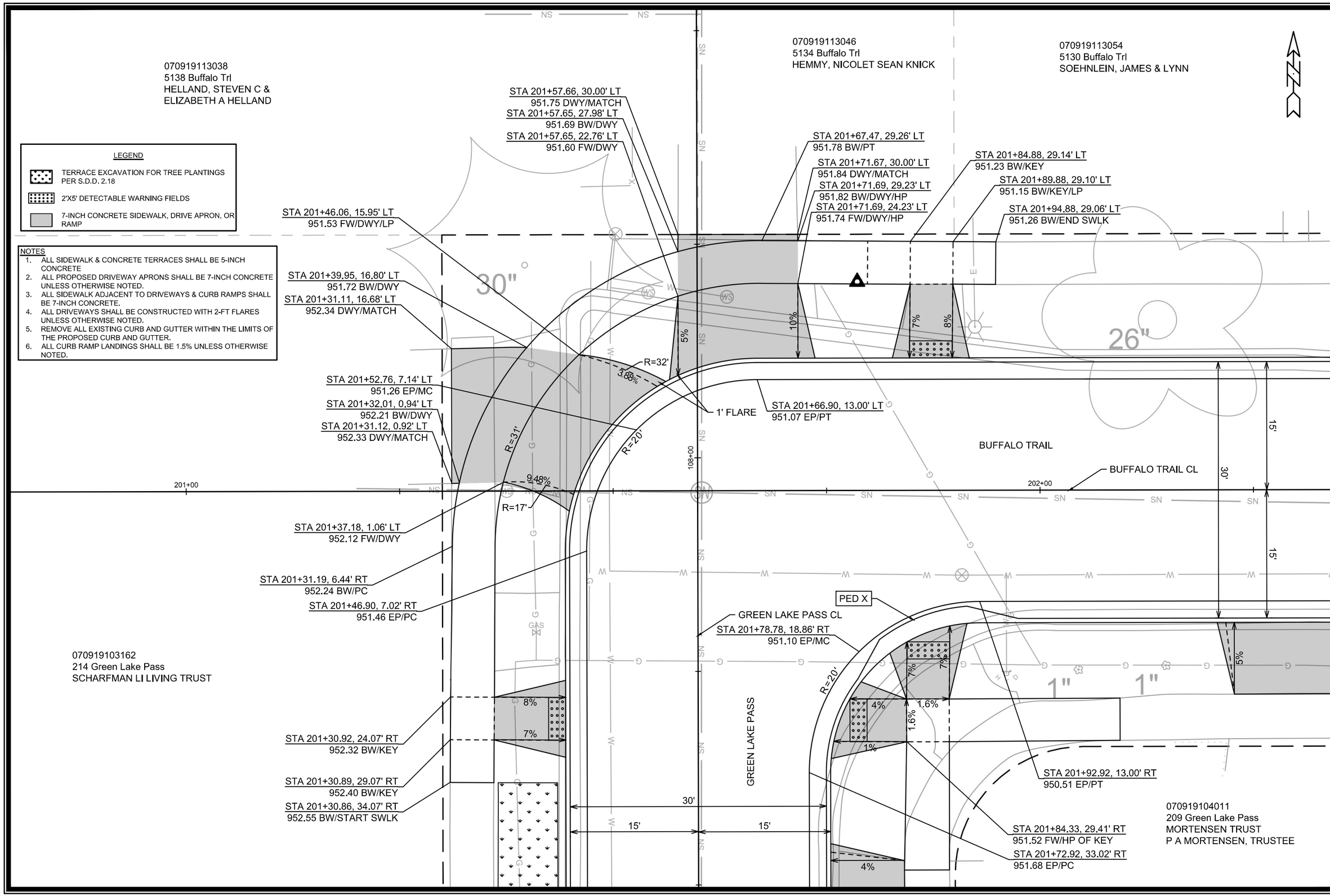


| MARK | REVISION | DATE | BY |
|---|---|---|---|
| -- | -- | -- | -- |
| -- | -- | -- | -- |
| -- | -- | -- | -- |
| -- | -- | -- | -- |

Designed By: NIJ | Date: 7/31/2025 11:33 AM | Scale: 1:10

15123 | PD-1

PLAN DETAIL - BUFFALO TRAIL AND GREEN LAKE PASS INTERSECTION

BUFFALO TRAIL, BARRON COURT, GREEN LAKE PASS

MADISON, WI

CONTRACT NO: 8806

M:\DESIGN\Projects\15123\CAD\Streets\15123EN-PlanDetails_BuffaloGreenLakeInt.dwg

15123

PD-1

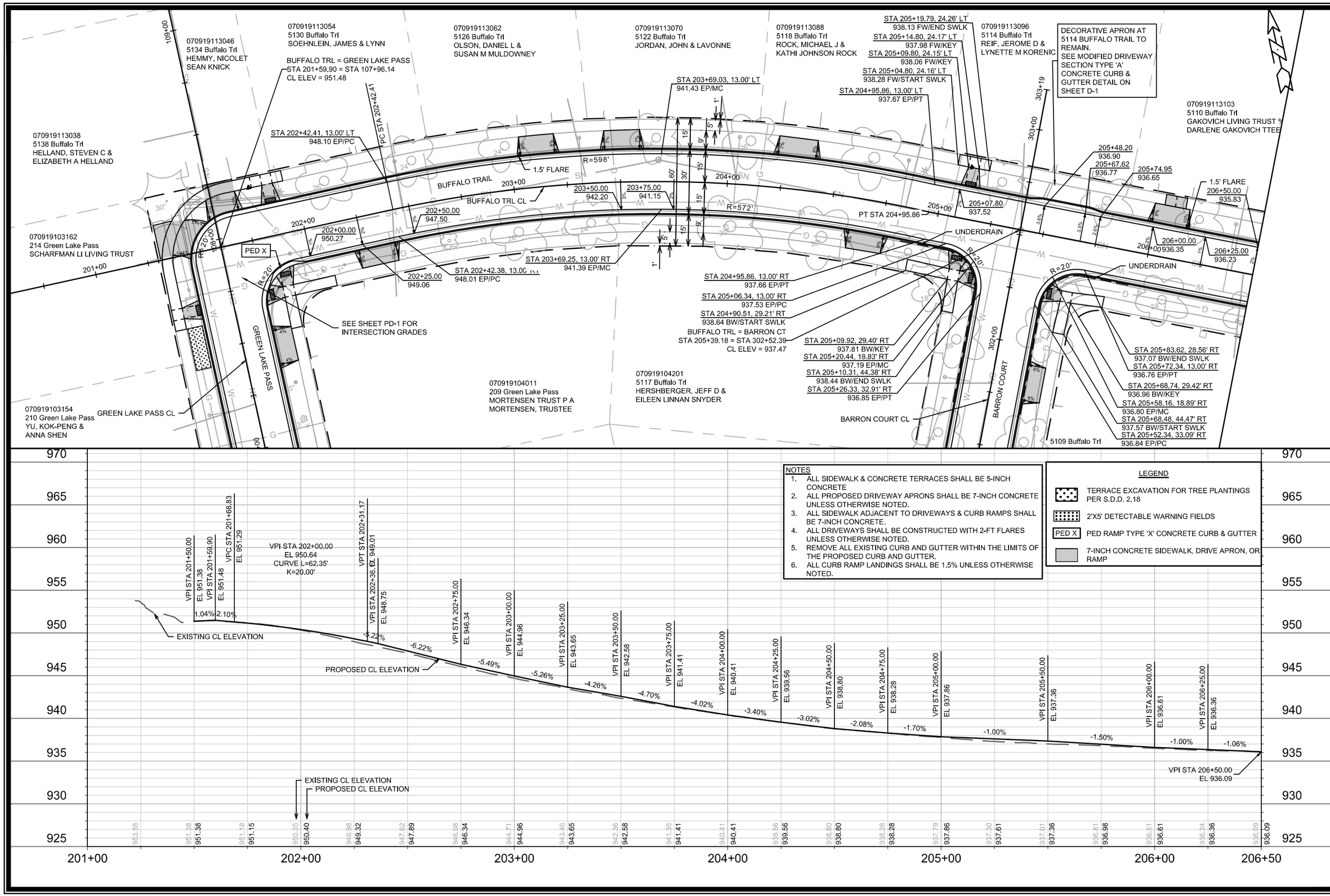


| MARK | REVISION | DATE | BY |
|---|---|---|---|
| -- | -- | -- | -- |
| -- | -- | -- | -- |
| -- | -- | -- | -- |
| -- | -- | -- | -- |

Designed By: NLJ | Date: 7/31/2025 11:34 AM | Scale: 1" = 40'

15123

P-1

15123

MADISON, WI

8806

CONTRACT NO:

PLAN & PROFILE - BUFFALO TRAIL

BUFFALO TRAIL, BARRON COURT, GREEN LAKE PASS

M:\DESIGN\Projects\15123\CAD\Streets\15123EN-PnPBuffalo.dwg

15123

P-1

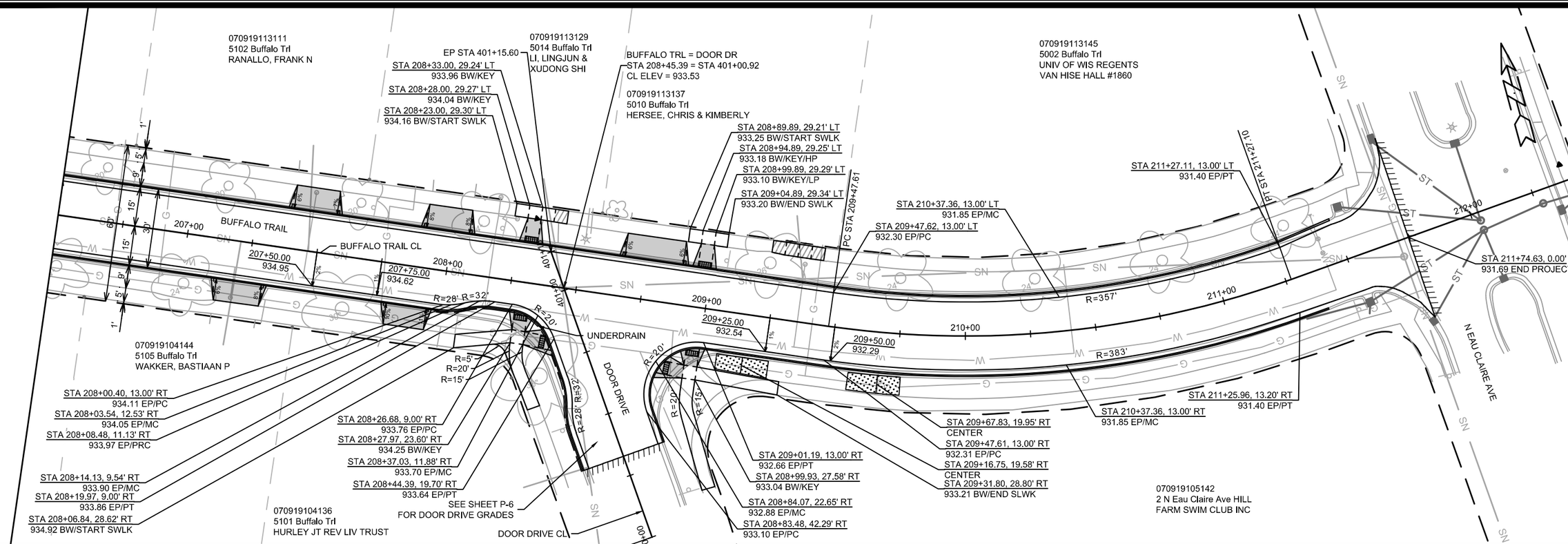


NOTES
1. ALL SIDEWALK & CONCRETE TERRACES SHALL BE 5-INCH CONCRETE
2. ALL PROPOSED DRIVEWAY APRONS SHALL BE 7-INCH CONCRETE UNLESS OTHERWISE NOTED.
3. ALL SIDEWALK ADJACENT TO DRIVEWAYS & CURB RAMPS SHALL BE 7-INCH CONCRETE.
4. ALL DRIVEWAYS SHALL BE CONSTRUCTED WITH 2-FT FLARES UNLESS OTHERWISE NOTED.
5. REMOVE ALL EXISTING CURB AND GUTTER WITHIN THE LIMITS OF THE PROPOSED CURB AND GUTTER.
6. ALL CURB RAMP LANDINGS SHALL BE 1.5% UNLESS OTHERWISE NOTED.

LEGEND
- SAWCUT PAVEMENT
- TERRACE EXCAVATION FOR TREE PLANTINGS PER S.D.D. 2.18
- 2'X5' DETECTABLE WARNING FIELDS
- REMOVAL FOR SEWER LATERAL WORK LIMITS TO BE DETERMINED IN THE FIELD
- 7-INCH CONCRETE SIDEWALK, DRIVE APRON, OR RAMP

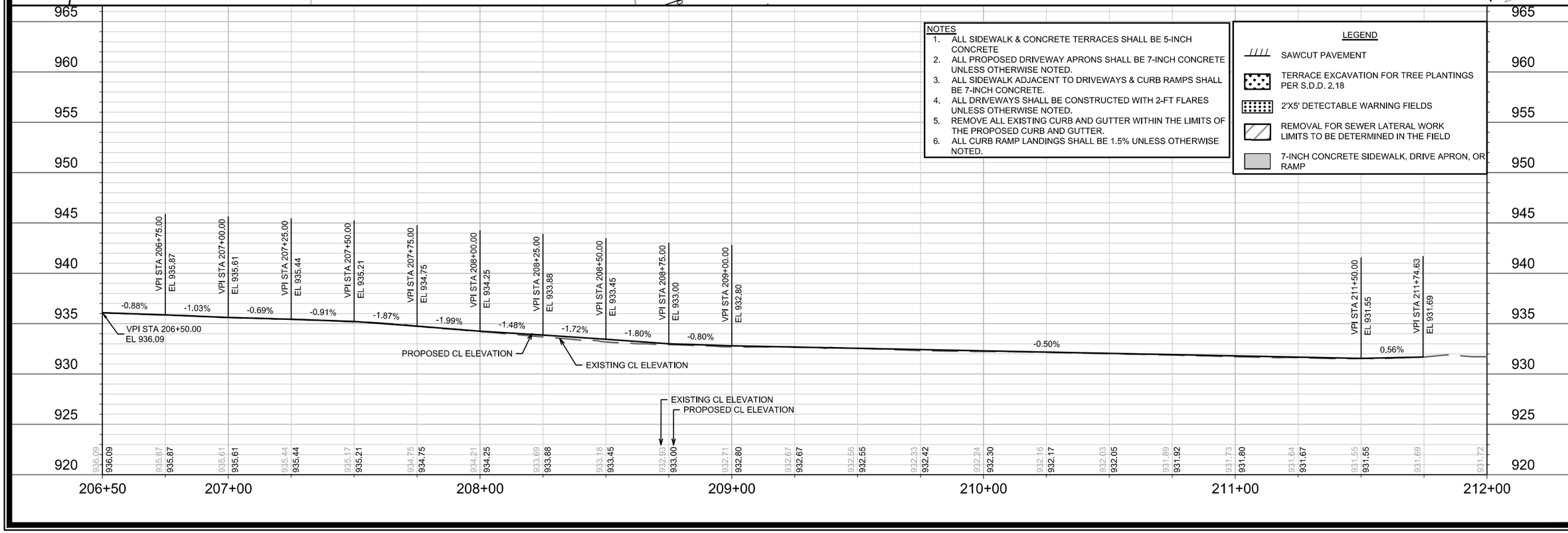


| MARK | REVISION | DATE | BY |
|---|---|---|---|
| -- | -- | -- | -- |
| -- | -- | -- | -- |
| -- | -- | -- | -- |
| -- | -- | -- | -- |
| -- | -- | -- | -- |

Designed By: NLJ | Date: 7/31/2025 11:34 AM | Scale: 1" = 40'

15123 | P-2

15123

MADISON, WI

8806

CONTRACT NO:

PLAN & PROFILE - BUFFALO TRAIL

BUFFALO TRAIL, BARRON COURT, GREEN LAKE PASS

M:\DESIGN\Projects\15123\CAD\Streets\15123EN-PnPBuffalo.dwg

CITY OF MADISON WISCONSIN

15123

P-2

LEGEND

- 2'X5' DETECTABLE WARNING FIELDS
- MNT A — TYPE 'A' MOUNTABLE CONCRETE CURB & GUTTER
- 7-INCH CONCRETE SIDEWALK, DRIVE APRON, OR RAMP

NOTES

1. ALL SIDEWALK & CONCRETE TERRACES SHALL BE 5-INCH CONCRETE
2. ALL PROPOSED DRIVEWAY APRONS SHALL BE 7-INCH CONCRETE UNLESS OTHERWISE NOTED.
3. ALL SIDEWALK ADJACENT TO DRIVEWAYS & CURB RAMPS SHALL BE 7-INCH CONCRETE.
4. ALL DRIVEWAYS SHALL BE CONSTRUCTED WITH 2-FT FLARES UNLESS OTHERWISE NOTED.
5. REMOVE ALL EXISTING CURB AND GUTTER WITHIN THE LIMITS OF THE PROPOSED CURB AND GUTTER.
6. ALL CURB RAMP LANDINGS SHALL BE 1.5% UNLESS OTHERWISE NOTED.

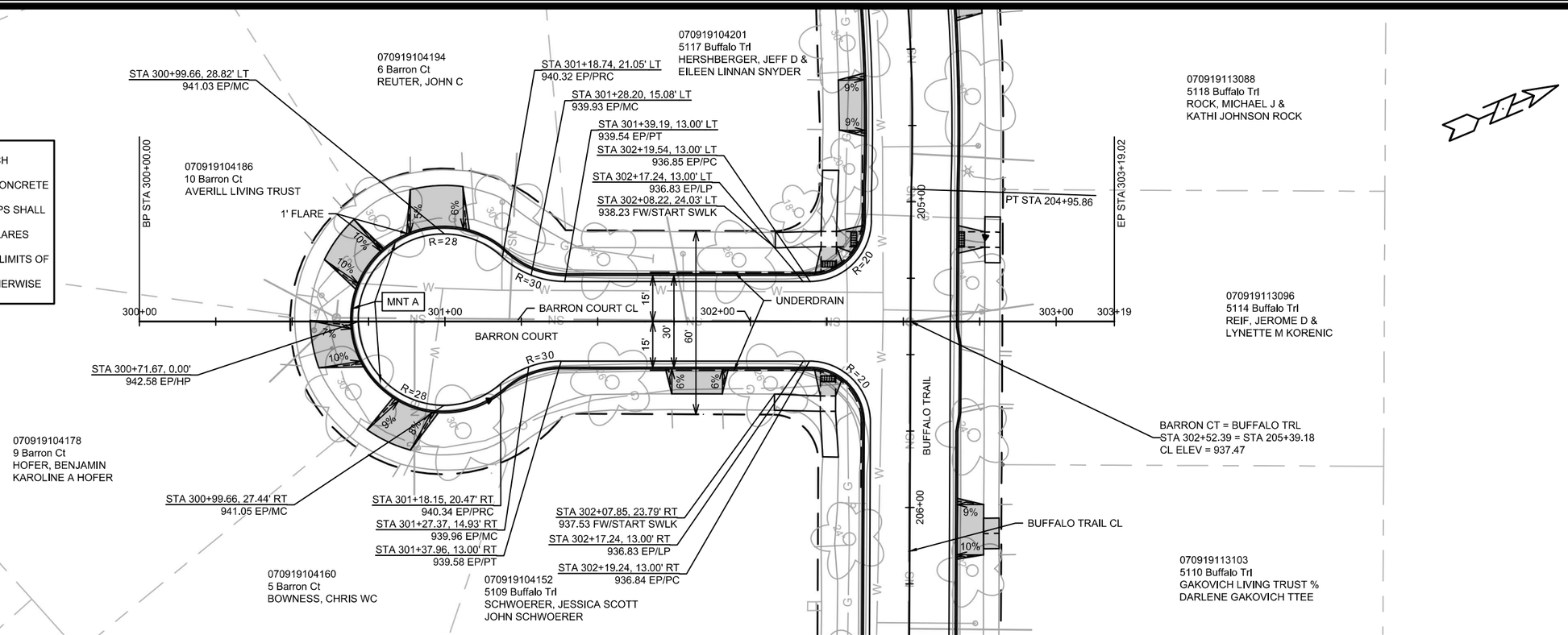


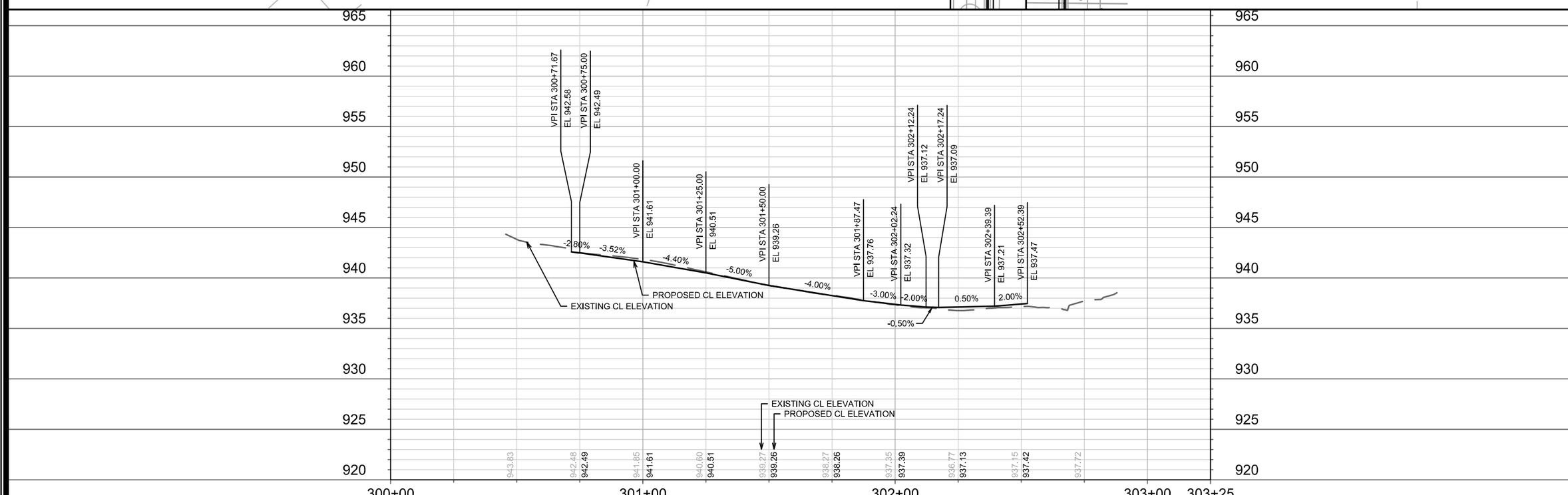


| MARK | REVISION | DATE | BY |
|---|---|---|---|
| -- | -- | -- | -- |
| -- | -- | -- | -- |
| -- | -- | -- | -- |
| -- | -- | -- | -- |
| -- | -- | -- | -- |

Designed By: NIJ | Date: 7/31/2025 11:35 AM | Scale: 1" = 40'

15123

P-3

15123

MADISON, WI

8806

CONTRACT NO:

PLAN & PROFILE - BARRON COURT

BUFFALO TRAIL, BARRON COURT, GREEN LAKE PASS

M:\DESIGN\Projects\15123\CAD\Streets\15123EN-PnPBarron.dwg

CITY OF MADISON WISCONSIN

15123

P-3

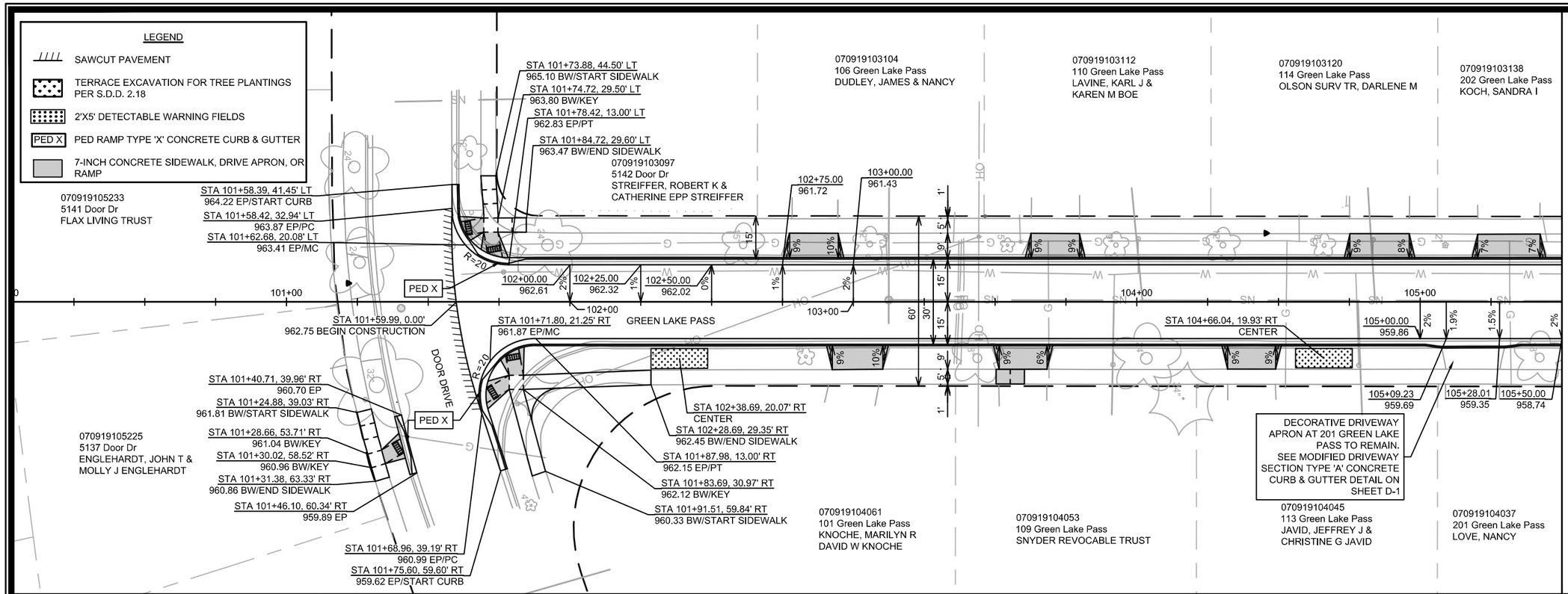


NOTES

1. ALL SIDEWALK & CONCRETE TERRACES SHALL BE 5-INCH CONCRETE
2. ALL PROPOSED DRIVEWAY APRONS SHALL BE 7-INCH CONCRETE UNLESS OTHERWISE NOTED.
3. ALL SIDEWALK ADJACENT TO DRIVEWAYS & CURB RAMPS SHALL BE 7-INCH CONCRETE.
4. ALL DRIVEWAYS SHALL BE CONSTRUCTED WITH 2-FT FLARES UNLESS OTHERWISE NOTED.
5. REMOVE ALL EXISTING CURB AND GUTTER WITHIN THE LIMITS OF THE PROPOSED CURB AND GUTTER.
6. ALL CURB RAMP LANDINGS SHALL BE 1.5% UNLESS OTHERWISE NOTED.

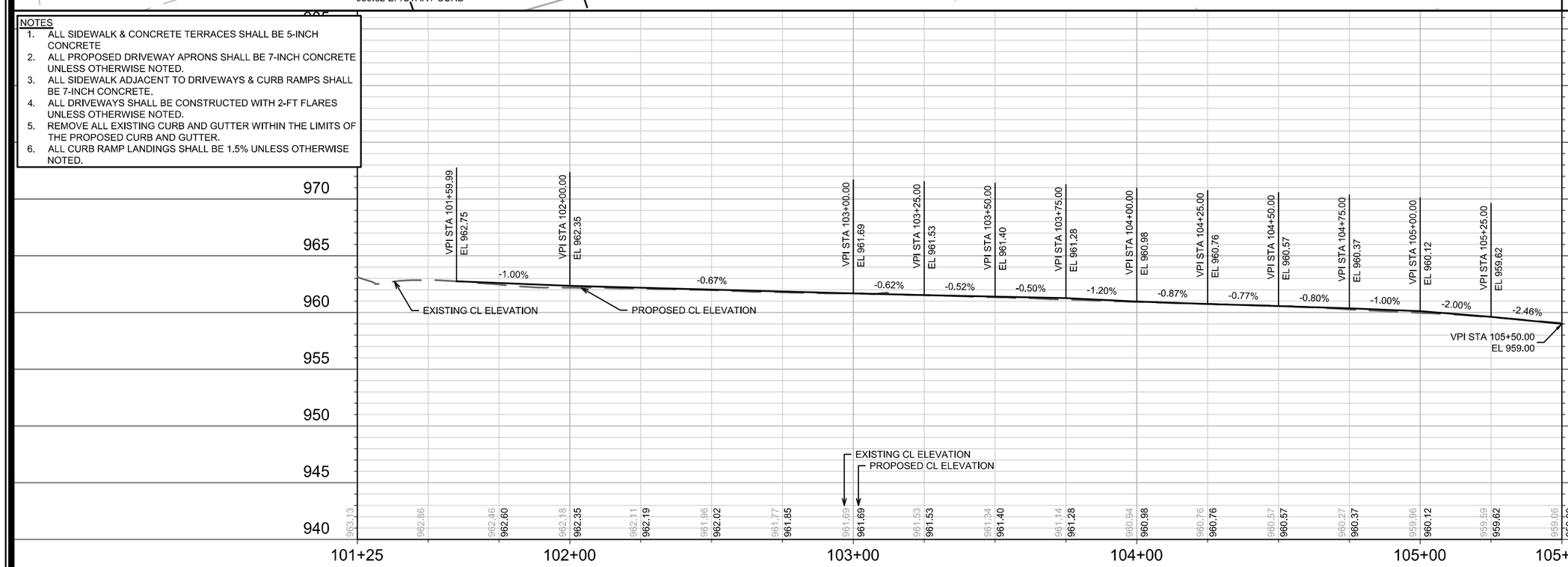


| MARK | REVISION | DATE | BY |
|---|---|---|---|
| -- | -- | -- | -- |
| -- | -- | -- | -- |
| -- | -- | -- | -- |
| -- | -- | -- | -- |

Designed By: NIJ | Date: 7/31/2025 11:35 AM | Scale: 1" = 40'

15123

MADISON, WI

CONTRACT NO: 8806

PLAN & PROFILE - GREEN LAKE PASS

BUFFALO TRAIL, BARRON COURT, GREEN LAKE PASS

M:\DESIGN\Projects\15123\CAD\Streets\15123EN-PnPGreenLake.dwg

15123

P-4

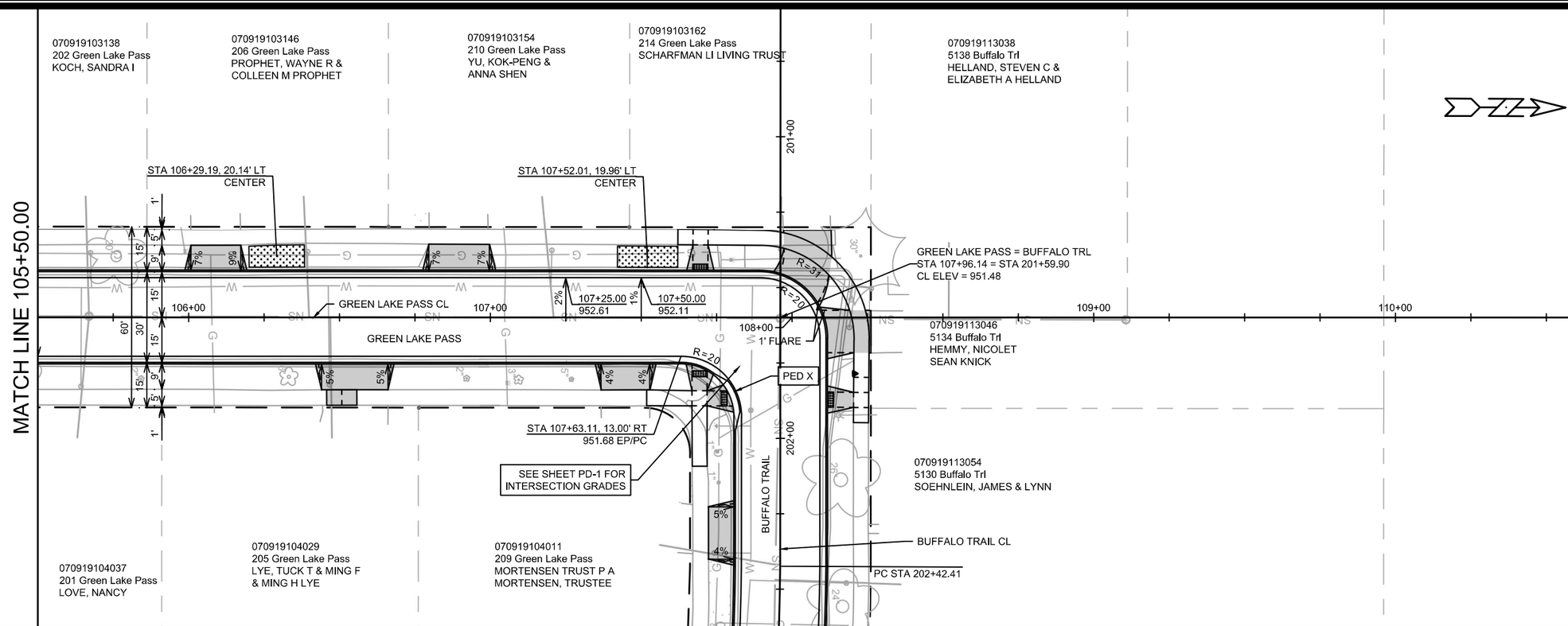


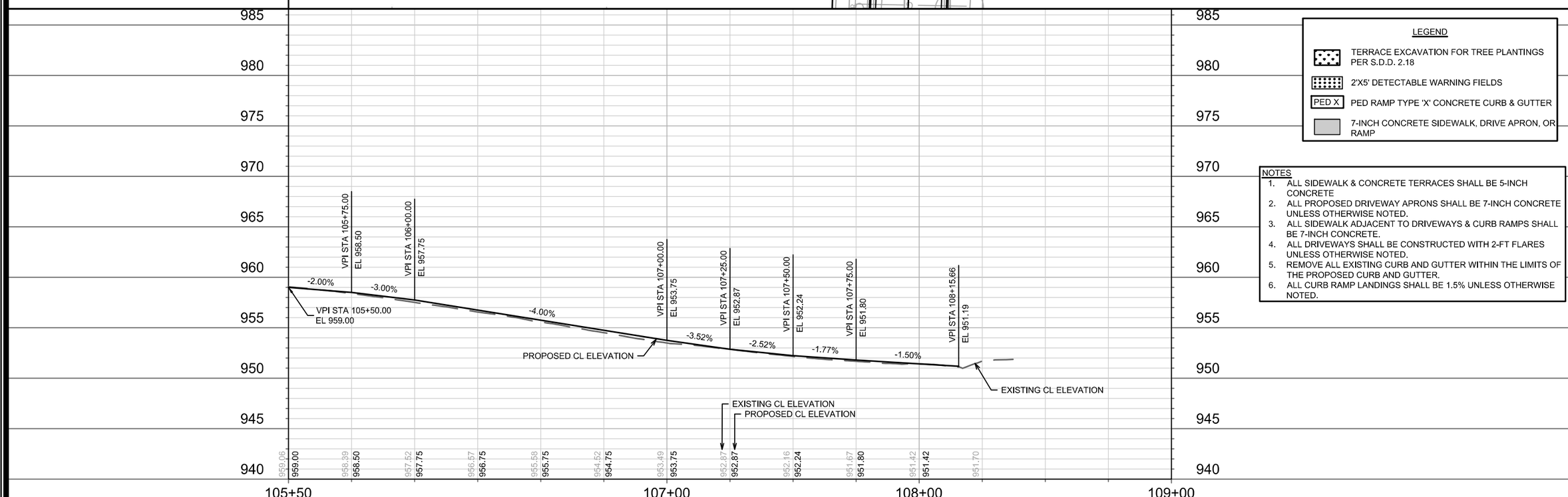


LEGEND

- TERRACE EXCAVATION FOR TREE PLANTINGS PER S.D.D. 2.18
- 2'X5' DETECTABLE WARNING FIELDS
- PED X — PED RAMP TYPE 'X' CONCRETE CURB & GUTTER
- 7-INCH CONCRETE SIDEWALK, DRIVE APRON, OR RAMP

NOTES

1. ALL SIDEWALK & CONCRETE TERRACES SHALL BE 5-INCH CONCRETE
2. ALL PROPOSED DRIVEWAY APRONS SHALL BE 7-INCH CONCRETE UNLESS OTHERWISE NOTED.
3. ALL SIDEWALK ADJACENT TO DRIVEWAYS & CURB RAMPS SHALL BE 7-INCH CONCRETE.
4. ALL DRIVEWAYS SHALL BE CONSTRUCTED WITH 2-FT FLARES UNLESS OTHERWISE NOTED.
5. REMOVE ALL EXISTING CURB AND GUTTER WITHIN THE LIMITS OF THE PROPOSED CURB AND GUTTER.
6. ALL CURB RAMP LANDINGS SHALL BE 1.5% UNLESS OTHERWISE NOTED.

| MARK | REVISION | DATE | BY |
|---|---|---|---|
| -- | -- | -- | -- |
| -- | -- | -- | -- |
| -- | -- | -- | -- |
| -- | -- | -- | -- |

Designed By: NIJ | Date: 7/31/2025 11:35 AM | Scale: 1" = 40'

15123 | P-5

15123

MADISON, WI

CONTRACT NO: 8806

PLAN & PROFILE - GREEN LAKE PASS

BUFFALO TRAIL, BARRON COURT, GREEN LAKE PASS

M:\DESIGN\Projects\15123\CAD\Streets\15123EN-PnPGreenLake.dwg

15123

P-5

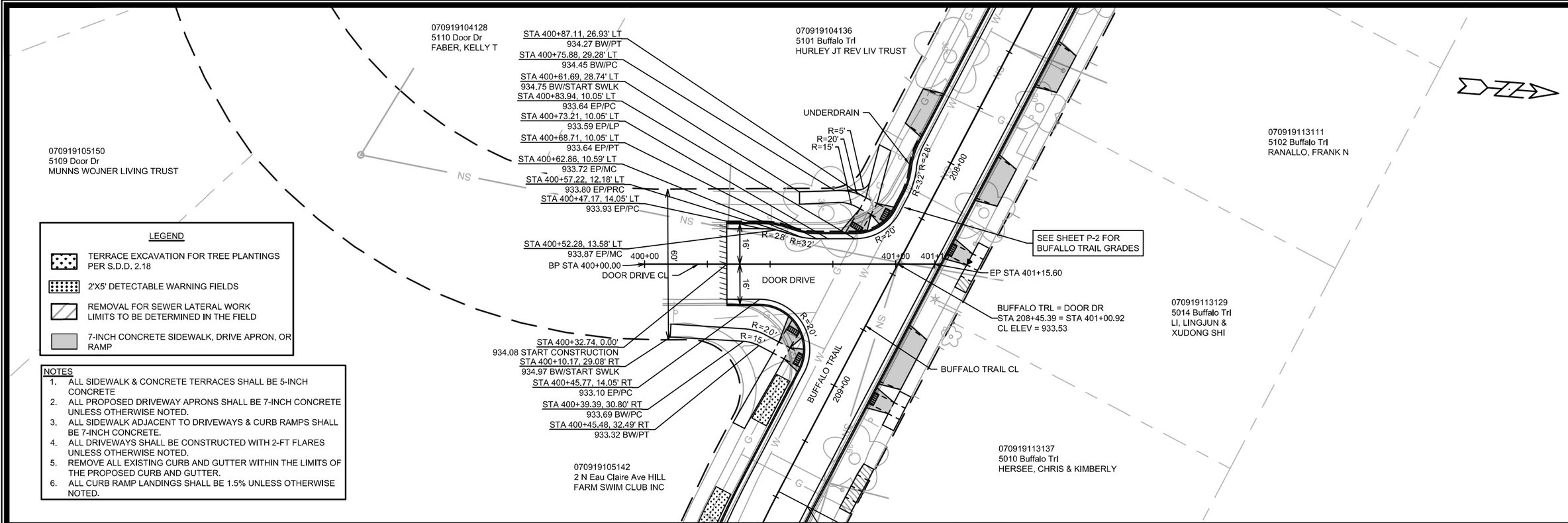


## LEGEND

- TERRACE EXCAVATION FOR TREE PLANTINGS PER S.D.D. 2.18
- 2'X5' DETECTABLE WARNING FIELDS
- REMOVAL FOR SEWER LATERAL WORK LIMITS TO BE DETERMINED IN THE FIELD
- 7-INCH CONCRETE SIDEWALK, DRIVE APRON, OR RAMP

## NOTES

1. ALL SIDEWALK & CONCRETE TERRACES SHALL BE 5-INCH CONCRETE
2. ALL PROPOSED DRIVEWAY APRONS SHALL BE 7-INCH CONCRETE UNLESS OTHERWISE NOTED.
3. ALL SIDEWALK ADJACENT TO DRIVEWAYS & CURB RAMPS SHALL BE 7-INCH CONCRETE.
4. ALL DRIVEWAYS SHALL BE CONSTRUCTED WITH 2-FT FLARES UNLESS OTHERWISE NOTED.
5. REMOVE ALL EXISTING CURB AND GUTTER WITHIN THE LIMITS OF THE PROPOSED CURB AND GUTTER.
6. ALL CURB RAMP LANDINGS SHALL BE 1.5% UNLESS OTHERWISE NOTED.

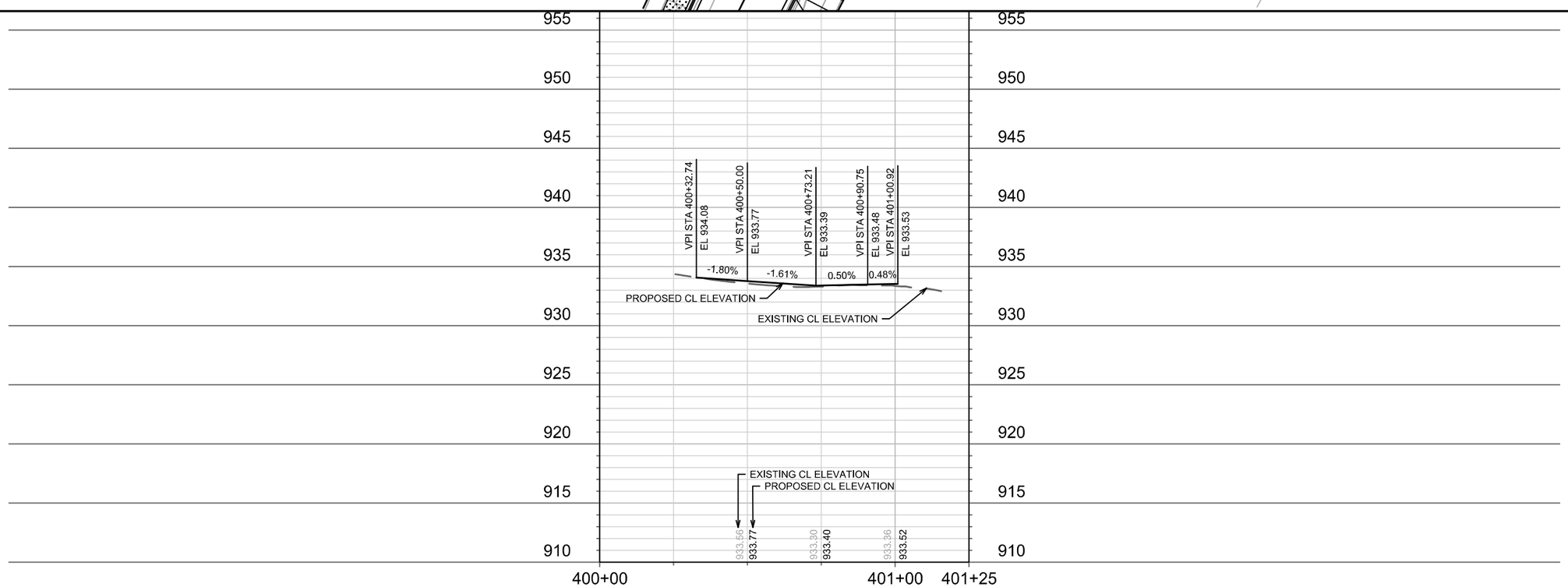


| MARK | REVISION | DATE | BY |
|---|---|---|---|
| -- | -- | -- | -- |
| -- | -- | -- | -- |
| -- | -- | -- | -- |
| -- | -- | -- | -- |

Designed By: NLJ | Date: 7/31/2025 11:36 AM | Scale: 1" = 40'

15123

PLAN & PROFILE - DOOR DRIVE

BUFFALO TRAIL, BARRON COURT, GREEN LAKE PASS

MADISON, WI

CONTRACT NO: 8806

M:\DESIGN\Projects\15123\CAD\Streets\15123EN-PnPDoor.dwg

15123

P-6

070919113046
5134 Buffalo Trl
HEMMY, NICOLET
SEAN KNICK

070919113054
5130 Buffalo Trl
SOEHNLEIN, JAMES & LYNN

070919113062
5126 Buffalo Trl
OLSON, DANIEL L & SUSAN M
MULDOWNEY

070919113070
5122 Buffalo Trl
JORDAN, JOHN & LAVONNE

070919113088
5118 Buffalo Trl
ROCK, MICHAEL J
& KATHI JOHNSON ROCK

070919113096
5114 Buffalo Trl
REIF, JEROME D &
LYNETTE M KORENIC

070919113103
5110 Buffalo Trl
GAKOVICH LIVING TRUST %
DARLENE GAKOVICH TTEE

070919113038
5138 Buffalo Trl
HELLAND, STEVEN C &
ELIZABETH A HELLAND

070919104201
5117 Buffalo Trl
HERSHBERGER, JEFF D &
EILEEN LINNAN SNYDER

070919104011
209 Green Lake Pass
MORTENSEN TRUST P A
MORTENSEN, TRUSTEE

070919104152
5109 Buffalo Trl
SCHWOERER, JESSICA SCOTT
JOHN SCHWOERER

070919103162
214 Green Lake Pass
SCHARFMAN LI
LIVING TRUST

ADJUST SAS CASTING & REPLACE CONCRETE (7" DEPTH) INCIDENTAL TO BID ITEM 20506.

ADJ EX SAS 3451-011

ADJ EX SAS 3451-014

ADJ EX SAS 3451-010

ADJ EX SAS 3451-015

EX 8" VCP SAN

BUFFALO TRL

BARRON CT

GREEN LAKE PASS

MATCH LINE 206+50.00

S-16, S-13A, P-13A 12", S-13, ULO25, ULO22, P-12 18", S-12A, P-12A 12", S-12, P-12B 12", S-12B, ULO21, B2, P-11 18", S-11, ULO20, P-10 18", ULO19, S-9, P-9 12", ULO18, S-10, ULO17, S-8, ULO16, P-7 12", S-7, P-8 18", S-5, P-4 19" X 30", ULO12, P-5 15", ULO13, S-6, ULO14, P-6 15", ULO15, ULO23, P-13 15", ULO24, S-14, P-14 12", ULO26, S-15, ULO27, P-15 12"

201+00, 202+00, 203+00, 204+00, 205+00, 206+00, 108+00, 109+00, 303+00, 302+00

CONTRACTOR MUST CONTACT MADISON WATER CONSTRUCTION SUPERVISOR JEFF BELSHAW (OFFICE 608-261-9835, CELL 608-206-3856) AT LEAST ONE WEEK PRIOR TO PERFORMING WORK.

- STYROFOAM SHEET (2"X4'X8') SHALL BE REQUIRED WHERE STORM CROSSES WATER UTILITIES.
- PENDING ULOS, WATER MAIN & LATERAL SERVICES RELOCATION WHERE REQUIRED SHALL BE COMPLETED & PAID PER BID ITEMS 90030 & 90031.

ADJ EX SAS3451-010
STA 201+60.38, RT-0.21'
RIM = 951.39
EI(S) = 942.25 (8")
EI(N) = 941.92 (8")
EI(E) = 941.84 (8")
EI(W) = 942.06 (4") - EX LAT
*- PROP RIM = 951.47*

ADJ EX SAS3451-014
STA 203+67.72, LT-10.10'
RIM = 941.40
EI(W) = 933.23 (8")
EI(SE) = 932.00 (8")
*- PROP RIM = 941.55*

ADJ EX SAS3451-015
STA 205+39.38, RT-0.27'
RIM = 937.19
EI(NW) = 928.38 (8")
EI(SW) = 928.75 (8")
EI(SE) = 928.07 (8")
EI(N) = 928.32 (4") - EX LAT
*- PROP RIM = 937.46*

B2
END BORING
EST. ELEV=927.13

EX 8" VCP SAN

965, 960, 955, 950, 945, 940, 935, 930, 925, 920

201+00, 202+00, 203+00, 204+00, 205+00, 206+00, 206+50

| MARK | REVISION | DATE | BY |
|---|---|---|---|
| -- | -- | -- | -- |
| -- | -- | -- | -- |
| -- | -- | -- | -- |
| -- | -- | -- | -- |

Designed By: DAO | Date: 7/31/2025 10:30 AM | Scale: 1" = 40'

15123 | U-1

15123

MADISON, WI

8806

CONTRACT NO:

SEWER UTILITIES PLAN & PROFILE - BUFFALO TRAIL

BUFFALO TRAIL, BARRON COURT, GREEN LAKE PASS

M:\DESIGN\Projects\15123\CAD\Sewers\15123SWR-PnP.dwg

CITY OF MADISON WISCONSIN

15123

U-1

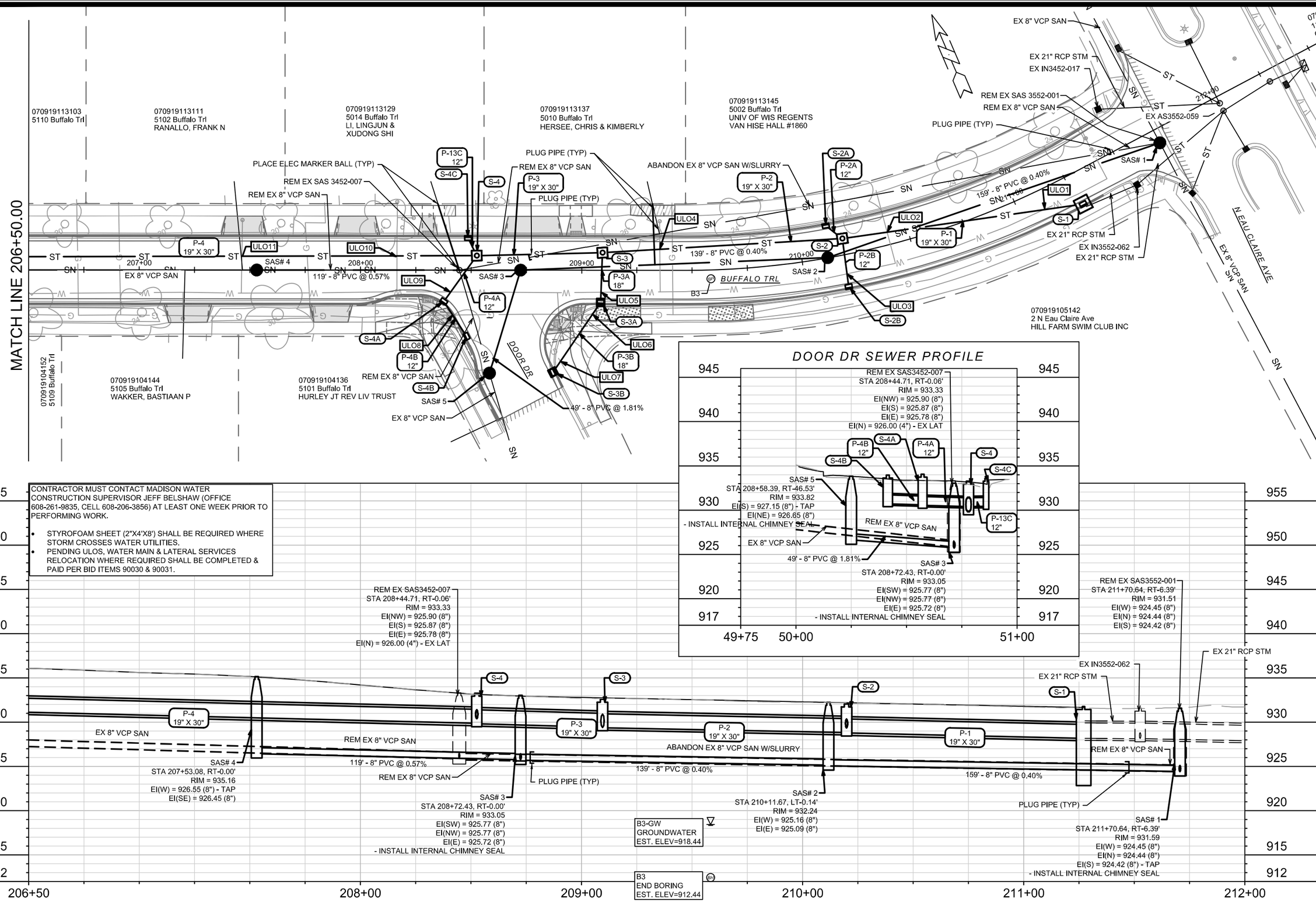


CONTRACTOR MUST CONTACT MADISON WATER CONSTRUCTION SUPERVISOR JEFF BELSHAW (OFFICE 608-261-9835, CELL 608-206-3856) AT LEAST ONE WEEK PRIOR TO PERFORMING WORK.

- STYROFOAM SHEET (2"X4'X8') SHALL BE REQUIRED WHERE STORM CROSSES WATER UTILITIES.
- PENDING ULOS, WATER MAIN & LATERAL SERVICES RELOCATION WHERE REQUIRED SHALL BE COMPLETED & PAID PER BID ITEMS 90030 & 90031.

| MARK | REVISION | DATE | BY |
|---|---|---|---|
| -- | -- | -- | -- |
| -- | -- | -- | -- |
| -- | -- | -- | -- |
| -- | -- | -- | -- |

Designed By: DAO | Date: 7/31/2025 10:14 AM | Scale: 1" = 40'

U-2

15123

MADISON, WI

8806

CONTRACT NO:

SEWER UTILITIES PLAN & PROFILE - BUFFALO TRAIL

BUFFALO TRAIL, BARRON COURT, GREEN LAKE PASS

M:\DESIGN\Projects\15123\CAD\Sewers\15123SWR-PnP.dwg

15123

U-2

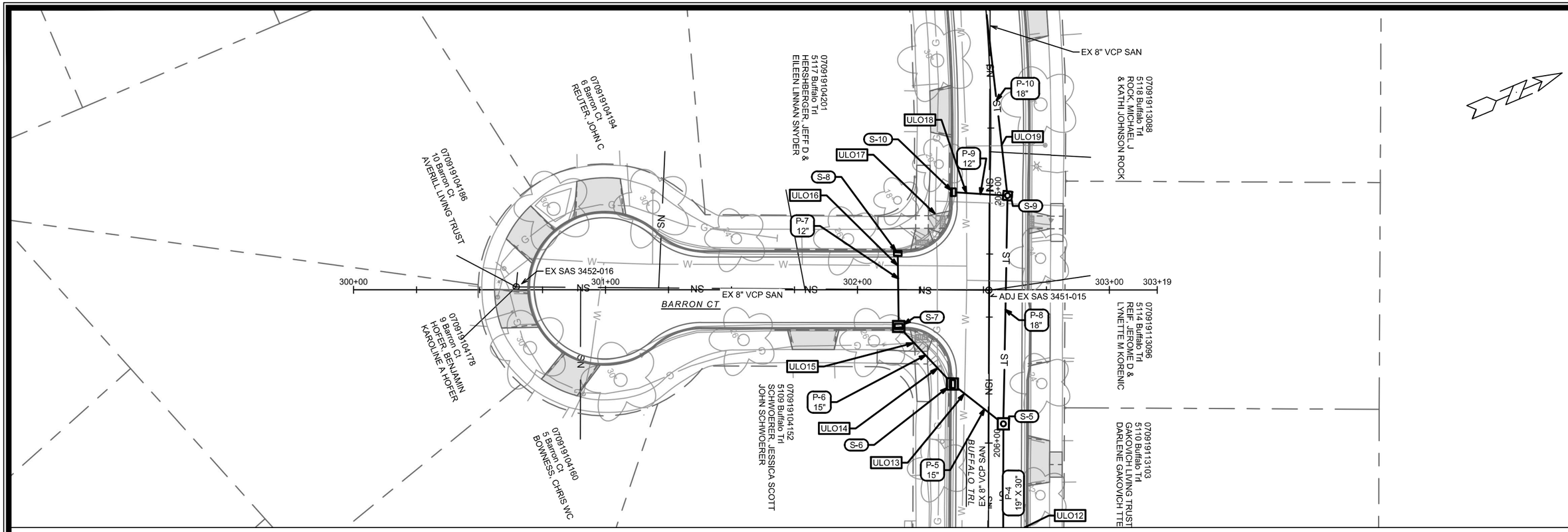


CONTRACTOR MUST CONTACT MADISON WATER CONSTRUCTION SUPERVISOR JEFF BELSHAW (OFFICE 608-261-9835, CELL 608-206-3856) AT LEAST ONE WEEK PRIOR TO PERFORMING WORK.

- STYROFOAM SHEET (2"X4'X8') SHALL BE REQUIRED WHERE STORM CROSSES WATER UTILITIES.
- PENDING ULOS, WATER MAIN & LATERAL SERVICES RELOCATION WHERE REQUIRED SHALL BE COMPLETED & PAID PER BID ITEMS 90030 & 90031.

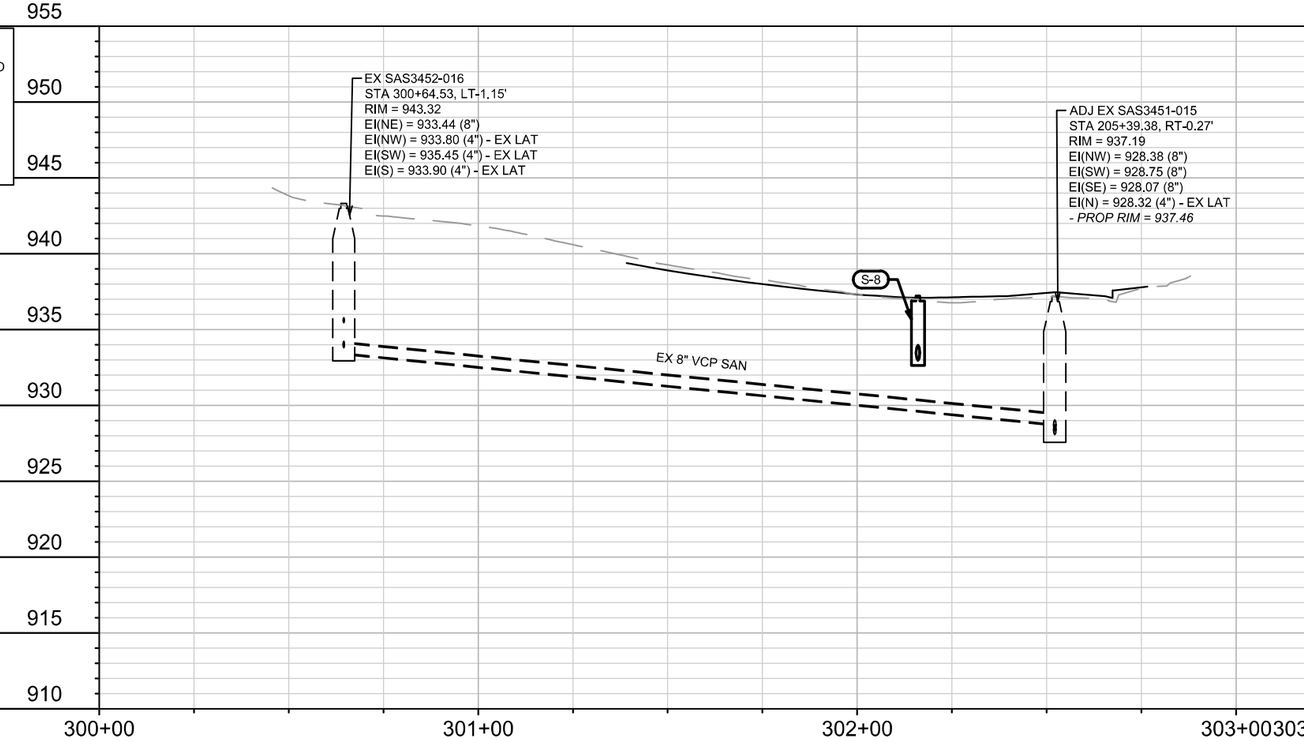


| MARK | REVISION | DATE | BY |
|---|---|---|---|
| --- | --- | --- | --- |
| --- | --- | --- | --- |
| --- | --- | --- | --- |
| --- | --- | --- | --- |
| --- | --- | --- | --- |

Designed By: DAO | Date: 7/31/2025 10:14 AM | Scale: 1" = 40'

15123 | U-3

15123

MADISON, WI

CONTRACT NO: 8806

SEWER UTILITIES PLAN & PROFILE - BARRON COURT

BUFFALO TRAIL, BARRON COURT, GREEN LAKE PASS

M:\DESIGN\Projects\15123\CAD\Sewers\15123SWR-PnP.dwg

15123

U-3

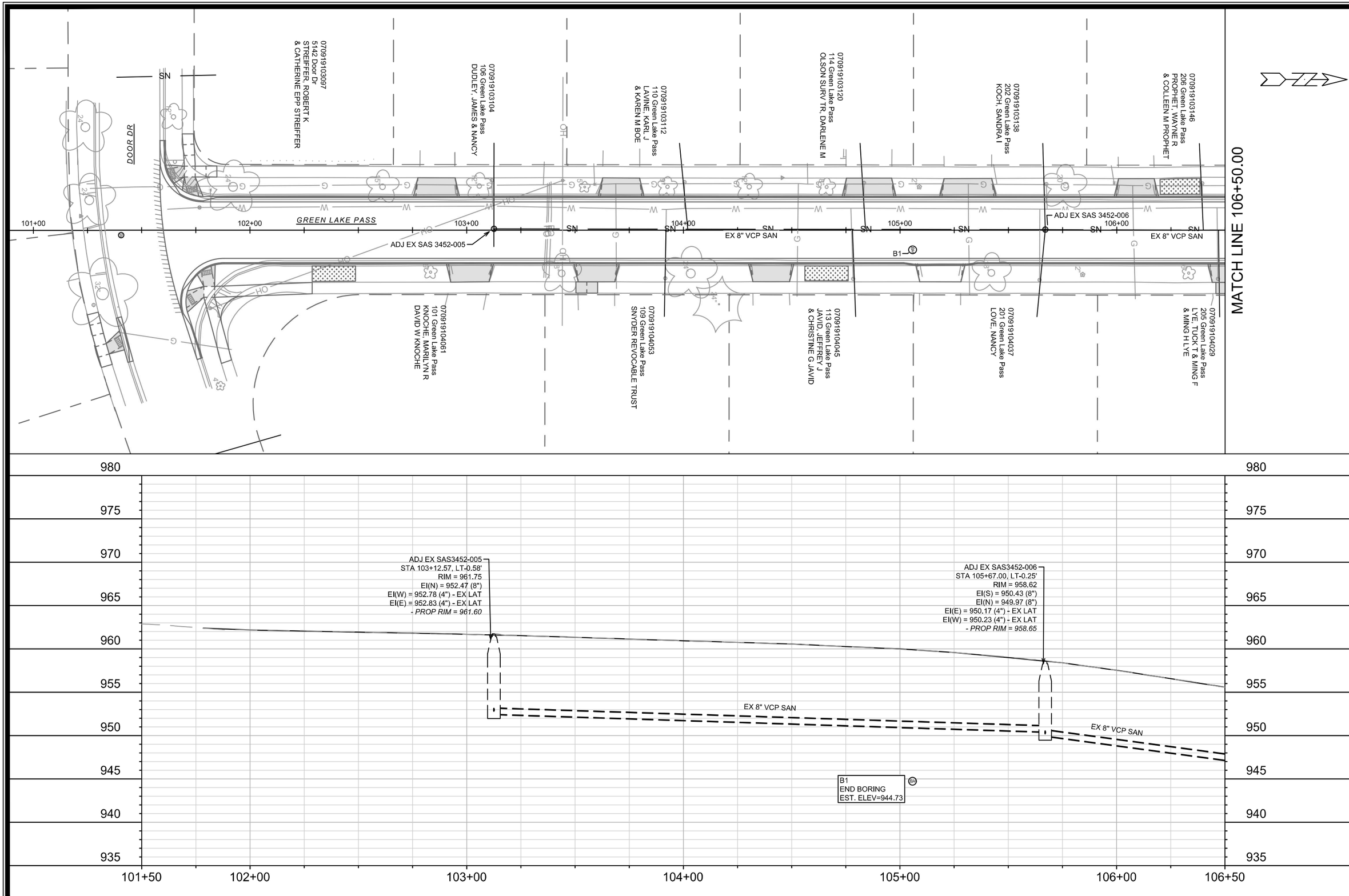


| MARK | REVISION | DATE | BY |
|---|---|---|---|
| -- | -- | -- | -- |
| -- | -- | -- | -- |
| -- | -- | -- | -- |
| -- | -- | -- | -- |

Designed By: DAO | Date: 7/31/2025 10:14 AM | Scale: 1" = 40'

15123 | U-4

15123

SEWER UTILITIES PLAN & PROFILE - GREEN LAKE PASS

BUFFALO TRAIL, BARRON COURT, GREEN LAKE PASS

MADISON, WI

CONTRACT NO: 8806

M:\DESIGN\Projects\15123\CAD\Sewers\15123SWR-PnP.dwg

CITY OF MADISON WISCONSIN

15123

U-4

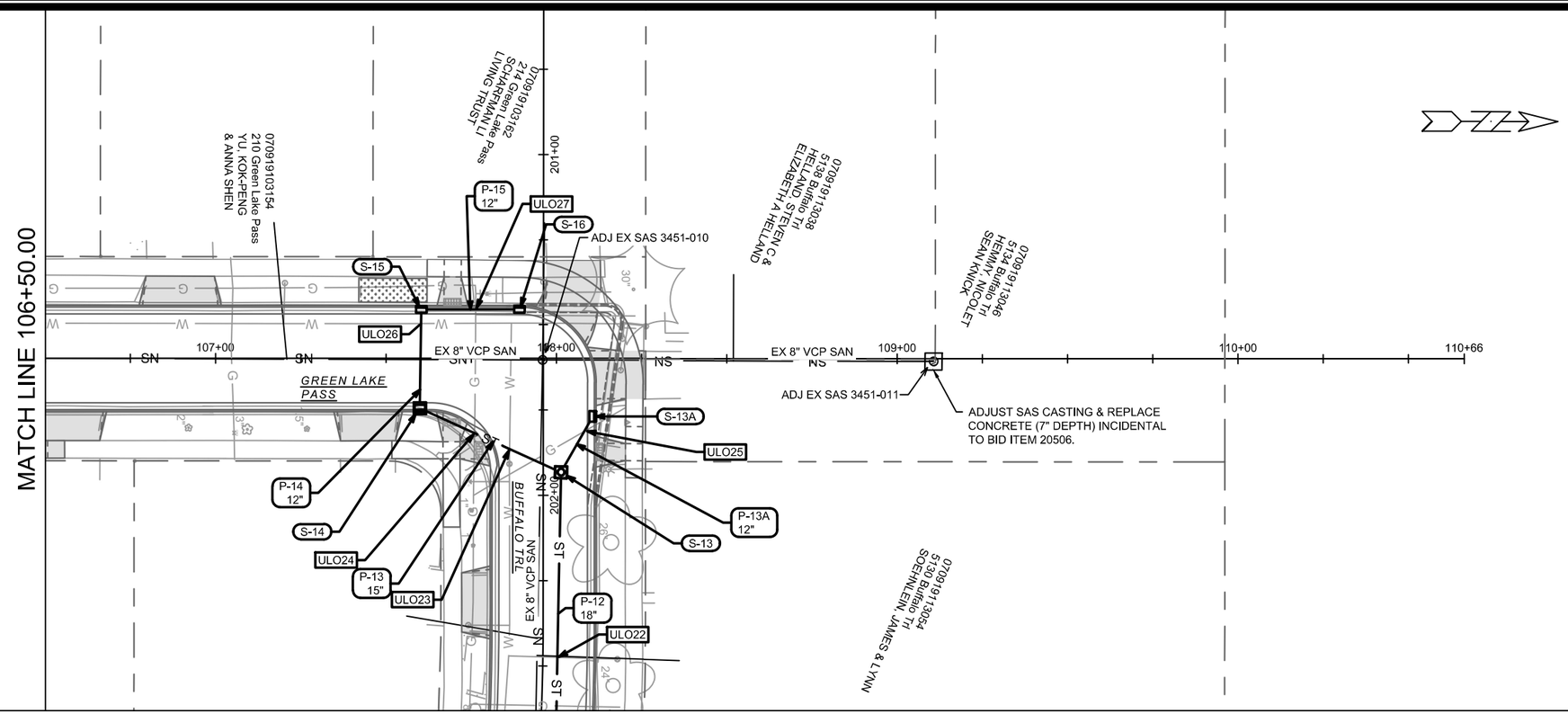


CONTRACTOR MUST CONTACT MADISON WATER CONSTRUCTION SUPERVISOR JEFF BELSHAW (OFFICE 608-261-9835, CELL 608-206-3856) AT LEAST ONE WEEK PRIOR TO PERFORMING WORK.

- STYROFOAM SHEET (2"X4'X8') SHALL BE REQUIRED WHERE STORM CROSSES WATER UTILITIES.
- PENDING ULOS, WATER MAIN & LATERAL SERVICES RELOCATION WHERE REQUIRED SHALL BE COMPLETED & PAID PER BID ITEMS 90030 & 90031.

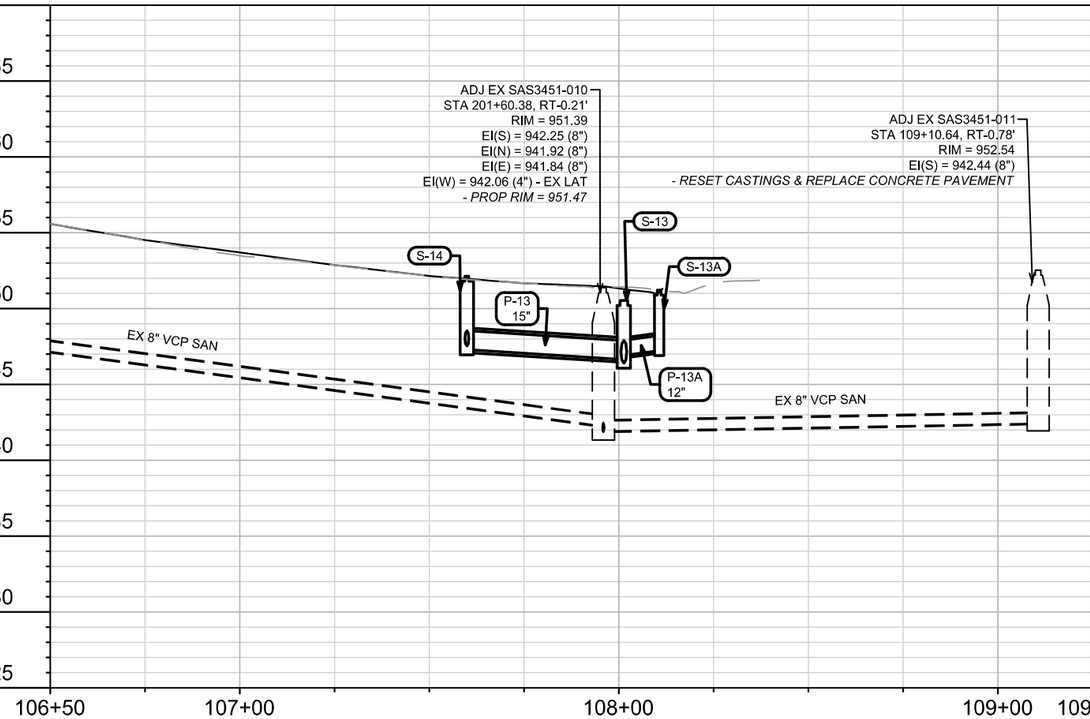


| MARK | REVISION | DATE | BY |
|---|---|---|---|
| -- | -- | -- | -- |
| -- | -- | -- | -- |
| -- | -- | -- | -- |
| -- | -- | -- | -- |

Designed By: DAO | Date: 7/31/2025 10:14 AM | Scale: 1" = 40'

15123

U-5

15123

MADISON, WI

CONTRACT NO: 8806

SEWER UTILITIES PLAN & PROFILE - GREEN LAKE PASS

BUFFALO TRAIL, BARRON COURT, GREEN LAKE PASS

M:\DESIGN\Projects\15123\CAD\Sewers\15123SWR-PnP.dwg

15123

U-5

# SANITARY SEWER SCHEDULE

## PROPOSED SANITARY STRUCTURES

| SAS NO. | STATION | LOCATION (OFFSET) | TOP OF CASTING | E.I. | DEPTH (FT) | NOTES |
|---|---|---|---|---|---|---|
| **BUFFALO TRL** | | | | | | |
| SAS# 1 | 211+70.64 | RT-6.39 | 931.59 | 924.42 | 7.17 | [1] |
| SAS# 2 | 210+11.67 | LT-0.14 | 932.24 | 925.09 | 7.15 | - |
| SAS# 3 | 208+72.43 | CL | 933.05 | 925.72 | 7.33 | [1] |
| SAS# 4 | 207+53.08 | CL | 935.16 | 926.45 | 8.71 | - |
| **DOOR DR** | | | | | | |
| SAS# 5 | 208+58.39 | RT-46.53 | 933.91 | 926.65 | 7.26 | [1] |

## PROPOSED SANITARY PIPES

| FROM (DNSTM) | TO (UPSTM) | DWNSTRM E.I. | UPSTRM E.I. | PLAN LGTH (FT) | SLOPE (%) | PIPE SIZE | PVC TYPE | NOTES |
|---|---|---|---|---|---|---|---|---|
| **BUFFALO TRL** | | | | | | | | |
| SAS# 1 | SAS# 2 | 924.45 | 925.09 | 159 | 0.40% | 8" | SDR-35 | - |
| SAS# 2 | SAS# 3 | 925.16 | 925.72 | 139 | 0.40% | 8" | SDR-35 | - |
| SAS# 3 | SAS# 4 | 925.77 | 926.45 | 119 | 0.57% | 8" | SDR-35 | - |
| **DOOR DR** | | | | | | | | |
| SAS# 3 | SAS# 5 | 925.77 | 926.65 | 49 | 1.81% | 8" | SDR-35 | - |

## SANITARY STRUCTURE REMOVALS

| STRUC ID NO. | STATION | LOCATION (OFFSET) | TOP OF CASTING | E.I. | DEPTH | NOTES |
|---|---|---|---|---|---|---|
| **BUFFALO TRL** | | | | | | |
| SAS3452-007 | 208+44.71 | RT-0.06 | 933.33 | 925.78 | 7.55 | REMOVE |
| SAS3552-001 | 211+70.64 | RT-6.39 | 931.51 | 924.42 | 7.09 | REMOVE |

## SANITARY PIPE REMOVALS & ABANDONMENTS

| REMOVE FROM | REMOVE TO | LGTH (FT) | PAID (Y/N) | REM LGTH PAID (FT) | ABN LGTH (FT) | CY SLURRY | PIPE SIZE | PIPE TYPE | NOTES |
|---|---|---|---|---|---|---|---|---|---|
| **BUFFALO TRL** | | | | | | | | | |
| SAS3552-001 | SAS3452-007 | 322 | Y | 50 | 272 | 3.5 | 8" | VCP | - |
| SAS3452-007 | SAS# 4 | 92 | N | 0 | 0 | 0 | 8" | VCP | - |
| SAS3452-007 | SAS# 5 | 34 | Y | 34 | 0 | 0 | 8" | VCP | - |

## SANITARY STRUCTURE ADJUSTMENTS

| STRUC ID NO. | STATION | LOCATION (OFFSET) | TOP OF CASTING | PROP TOC | ADJ (FT) | NOTES |
|---|---|---|---|---|---|---|
| **BUFFALO TRL** | | | | | | |
| SAS3451-010 | 201+60.38 | RT-0.21 | 951.39 | 951.47 | 0.08 | [2] |
| SAS3451-014 | 203+67.72 | LT-10.10 | 941.40 | 941.55 | 0.15 | [2] |
| SAS3451-015 | 205+39.38 | RT-0.27 | 937.19 | 937.46 | 0.27 | [2] |
| **GREEN LAKE PASS** | | | | | | |
| SAS3452-005 | 103+12.57 | LT-0.58 | 961.75 | 961.60 | -0.15 | [2] |
| SAS3452-006 | 105+67.00 | LT-0.25 | 958.62 | 958.65 | 0.03 | [2] |
| SAS3451-011 | 109+10.64 | RT-0.78 | 952.54 | 952.54 | 0.00 | [3] |

## SPECIFIC NOTES

[1] INSTALL INTERNAL CHIMNEY SEAL
[2] ADJUST CASTING - RESURFACING (BID ITEM 40362)
[3] REMOVE CASTING & CONCRETE; INSTALL NEW ADJ RINGS & REPLACE CONCRETE PAVEMENT (BID ITEM 20506)

# STORM SEWER SCHEDULE

## PROPOSED STORM STRUCTURES

| STRUC. NO. | STATION | LOCATION (OFFSET) | TYPE | TOP OF CASTING | E.I. | DEPTH | NOTES |
|---|---|---|---|---|---|---|---|
| **BUFFALO TRL** | | | | | | | |
| S-1 | 211+27.05 | RT-14.61 | 6'X6' CATCHBASIN | 931.77 | 928.17 | 3.60 | FP; W/R-3067-7004V; [1] |
| S-2 | 210+19.86 | LT-7.41 | 4'X4' STM SAS | 932.05 | 928.78 | 3.27 | FP; W/R-1550 |
| S-2A | 210+13.35 | LT-14.50 | H INLET | 932.35 | 929.58 | 2.77 | FP; W/R-3067-7004V |
| S-2B | 210+18.52 | RT-14.50 | H INLET | 932.32 | 929.64 | 2.68 | FP; W/R-3067-7004V |
| S-3 | 209+09.49 | LT-7.95 | 4'X4' STM SAS | 932.59 | 929.37 | 3.22 | FP; W/R-1550 |
| S-3A | 209+08.68 | RT-14.50 | 3'X'3 STM SAS | 933.00 | 929.52 | 3.48 | FP; W/R-3067-7004V |
| S-3B | 208+87.15 | RT-46.07 | 3'X'3 STM SAS | 933.53 | 929.76 | 3.77 | FP; W/R-3067-7004V |
| S-4 | 208+52.62 | LT-6.56 | 4'X4' STM SAS | 933.27 | 929.82 | 3.45 | FP; W/R-1550 |
| S-4A | 208+37.72 | RT-14.15 | H INLET | 934.07 | 930.54 | 3.53 | W/R-3067-7004V |
| S-4B | 208+48.05 | RT-29.90 | H INLET | 933.97 | 930.72 | 3.25 | LP; W/R-3067-7004VB |
| S-4C | 208+48.69 | LT-14.50 | H INLET | 933.59 | 930.43 | 3.16 | W/R-3067-7004V |
| S-5 | 205+92.35 | LT-5.79 | 4'X4' STM SAS | 936.60 | 931.48 | 5.12 | FP; W/R-1550 |
| S-6 | 205+76.61 | RT-14.50 | 4'X4' STM SAS | 937.07 | 932.21 | 4.86 | W/R-3067-7004V |
| **BARRON CT** | | | | | | | |
| S-7 | 302+16.35 | RT-14.50 | 4'X4' STM SAS | 937.22 | 932.42 | 4.80 | LP; W/R-3067-7004VB |
| S-8 | 302+16.03 | LT-14.50 | H INLET | 937.22 | 932.97 | 4.25 | LP; W/R-3067-7004VB |
| **BUFFALO TRL** | | | | | | | |
| S-9 | 205+01.77 | LT-7.02 | 3'X'3 STM SAS | 937.70 | 933.20 | 4.50 | W/R-1550 |
| S-10 | 205+00.49 | RT-14.50 | H INLET | 937.97 | 933.97 | 4.00 | W/R-3067-7004V |
| S-11 | 203+90.67 | LT-0.04 | 3'X'3 STM SAS | 940.78 | 936.44 | 4.34 | W/R-1550 |
| S-12 | 202+79.18 | LT-4.93 | 3'X'3 STM SAS | 946.01 | 942.01 | 4.00 | W/R-1550 |
| S-12A | 202+74.65 | LT-14.50 | H INLET | 946.47 | 942.80 | 3.67 | W/R-3067-7004V |
| S-12B | 202+74.81 | RT-14.50 | H INLET | 946.33 | 942.78 | 3.55 | W/R-3067-7004V |
| S-13 | 201+93.15 | LT-5.20 | 3'X'3 STM SAS | 950.53 | 946.40 | 4.13 | W/R-1550 |
| S-13A | 201+76.76 | LT-14.50 | H INLET | 951.23 | 947.23 | 4.00 | W/R-3067-7004V |
| **GREEN LAKE PASS** | | | | | | | |
| S-14 | 107+59.90 | RT-14.50 | 3'X'3 STM SAS | 952.13 | 947.29 | 4.84 | W/R-3067-7004V |
| S-15 | 107+60.34 | LT-14.50 | H INLET | 952.30 | 947.87 | 4.43 | W/R-3067-7004V |
| S-16 | 107+89.13 | LT-14.50 | H INLET | 951.83 | 948.23 | 3.60 | W/R-3067-7004V |

## PROPOSED STORM PIPES

| PIPE NO. | FROM (DNSTM) | TO (UPSTM) | DISCH. E.I. | INLET E.I. | PLAN (PAY) LGTH (FT) | PIPE LGTH (FT) | SLOPE (%) | PIPE SIZE | TYPE | NOTES |
|---|---|---|---|---|---|---|---|---|---|---|
| **BUFFALO TRL** | | | | | | | | | | |
| P-1 | S-1 | S-2 | 928.17 | 928.78 | 110 | 105 | 0.58% | 19"X30" | HERCP | - |
| P-2 | S-2 | S-3 | 928.83 | 929.37 | 109 | 105 | 0.52% | 19"X30" | HERCP | - |
| P-2A | S-2 | S-2A | 929.36 | 929.58 | 10 | 5 | 4.22% | 12" | RCP | - |
| P-2B | S-2 | S-2B | 929.36 | 929.64 | 22 | 19 | 1.48% | 12" | RCP | - |
| P-3 | S-3 | S-4 | 929.42 | 929.82 | 57 | 53 | 0.76% | 19"X30" | HERCP | - |
| P-3A | S-3 | S-3A | 929.41 | 929.52 | 22 | 19 | 0.58% | 18" | RCP | NCM |
| P-3B | S-3A | S-3B | 929.57 | 929.76 | 38 | 35 | 0.55% | 18" | RCP | - |
| P-4 | S-4 | S-5 | 929.87 | 931.48 | 260 | 256 | 0.63% | 19"X30" | HERCP | - |
| P-4A | S-4 | S-4A | 930.40 | 930.54 | 26 | 22 | 0.64% | 12" | RCP | - |
| P-4B | S-4A | S-4B | 930.59 | 930.72 | 19 | 16 | 0.83% | 12" | RCP | - |
| P-4C | S-4 | S-4C | 930.40 | 930.43 | 9 | 5 | 0.55% | 12" | RCP | - |
| P-5 | S-5 | S-6 | 931.81 | 932.21 | 26 | 21 | 1.95% | 15" | RCP | - |
| **BARRON CT** | | | | | | | | | | |
| P-6 | S-6 | S-7 | 932.21 | 932.42 | 31 | 26 | 0.82% | 15" | RCP | - |
| P-7 | S-7 | S-8 | 932.67 | 932.97 | 29 | 26 | 1.15% | 12" | RCP | - |
| P-8 | S-5 | S-9 | 931.56 | 933.20 | 91 | 87 | 1.88% | 18" | RCP | - |
| **BUFFALO TRL** | | | | | | | | | | |
| P-9 | S-9 | S-10 | 933.70 | 933.97 | 22 | 19 | 1.42% | 12" | RCP | - |
| P-10 | S-10 | S-11 | 933.30 | 936.44 | 112 | 109 | 2.89% | 18" | RCP | - |
| P-11 | S-11 | S-12 | 936.49 | 942.01 | 112 | 109 | 5.06% | 18" | RCP | - |
| P-12 | S-12 | S-13 | 942.06 | 946.40 | 86 | 84 | 5.20% | 18" | RCP | - |
| P-12A | S-12 | S-12A | 942.51 | 942.80 | 11 | 8 | 3.78% | 12" | RCP | - |
| P-12B | S-12 | S-12B | 942.51 | 942.78 | 20 | 17 | 1.55% | 12" | RCP | - |
| P-13 | S-13 | S-14 | 946.65 | 947.29 | 45 | 42 | 1.52% | 15" | RCP | - |
| P-13A | S-13 | S-13A | 946.90 | 947.23 | 19 | 15 | 2.15% | 12" | RCP | - |
| **GREEN LAKE PASS** | | | | | | | | | | |
| P-14 | S-14 | S-15 | 947.54 | 947.87 | 29 | 27 | 1.24% | 12" | RCP | - |
| P-15 | S-15 | S-16 | 947.92 | 948.23 | 29 | 26 | 1.20% | 12" | RCP | - |

## SPECIFIC NOTES:

[1] INSTALL 5' SUMP BELOW INVERT IN CHART

## STANDARD NOTES:

-PLAN LENGTH (PAY LENGTH) IS FROM CENTER OF STRUCTURE TO CENTER OF STRUCTURE. PIPE LENGTH IS ACTUAL LENGTH OF PIPE FROM STRUCTURE WALL TO STRUCTURE WALL. SLOPE CALCULATED USING PIPE LENGTH.

-ALL FIELD POURED SAS STORM STRUCTURES SHALL BE CONSTRUCTED IN ACCORDANCE WITH STANDARD DETAIL DRAWING 5.7.3. ALL PRECAST SAS STORM STRUCTURES SHALL BE CONSTRUCTED IN ACCORDANCE WITH STANDARD DETAIL DRAWING 5.7.5.

-ALL REBAR FOR FIELD POURED STRUCTURES SHALL BE EPOXY COATED. ANY EXPOSED STEEL SHALL BE TOUCHED UP OR RECOATE

- ABBREVIATIONS: AE = APRON ENDWALL; RCP = REINFORCED CONCRETE PIPE; HERCP = HORIZONTAL ELLIPTICAL REINFORCED CONCRETE PIPE; DNA = DOES NOT APPLY; SAS = SEWER ACCESS STRUCTURE; LP = LOW POINT INLET STRUCTURE; FP = FIELD POURED STRUCTURE; TR = TOP OF CONCRETE ROOF; NCM = NO CROWN MATCH FOR PIPES; UD = UNDERDRAIN
- APPROXIMATE DISCHARGE E.I. GIVEN, ADJUST E.I. AND PIPE SLOPE IN THE FIELD.
- TOP OF CASTING GRADE GIVEN IS THE TOP OF CURB FOR INLET STRUCTURES AND THE FLOWLINE OF THE CLOSED CASTING FOR SAS's.
- ALL REINFORCED CONCRETE PIPES TO BE CLASS 3 UNLESS OTHERWISE NOTED.
- SURVEYOR TO CONFIRM THAT ALL INLET STATION / OFFSETS LINE UP WITH PROPOSED CURB AND GUTTER.
- ALL STRUCTURES CALLED OUT AS FIELD POURED SHALL BE FIELD POURED. ALL OTHER STRUCTURES (NOT INDICATED AS FIELD POURED) SHALL BE SUBMITTED TO CITY ENGINEERING FOR APPROVAL IF PRECAST STRUCTURES ARE PREFERRED. CONTACT DANIEL OLIVARES OF CITY ENGINEERING AT (608) 261-9285 FOR PRECAST APPROVALS, FAX SHOP DRAWINGS TO (608)264-9275, OR EMAIL SHOP DRAWINGS TO DAOLIVARES@CITYOFMADISON.COM.

# STORM SEWER SCHEDULE

## ULO SCHEDULE

| ID NO. (OFFSET) | STATION | LOCATION (OFFSET) | TYPE | NOTES |
|---|---|---|---|---|
| **BUFFALO TRL** | | | | |
| ULO1 | 211+10.86 | RT-8.91 | WATERMAIN | - |
| ULO2 | 210+40.61 | LT-5.75 | WATER LAT | - |
| ULO3 | 210+18.86 | RT-8.66 | WATERMAIN | - |
| ULO4 | 209+35.26 | LT-9.49 | WATER LAT | - |
| ULO5 | 209+08.85 | RT-9.97 | WATERMAIN | - |
| ULO6 | 209+04.97 | RT-19.94 | GAS | - |
| ULO7 | 208+90.49 | RT-41.18 | GAS | - |
| ULO8 | 208+41.82 | RT-20.22 | GAS | - |
| ULO9 | 208+40.81 | RT-9.86 | WATERMAIN | - |
| ULO10 | 208+16.48 | LT-5.99 | WATER LAT | - |
| ULO11 | 207+46.40 | LT-5.93 | WATER LAT | - |
| ULO12 | 206+37.82 | LT-5.51 | WATER LAT | - |
| ULO13 | 205+80.35 | RT-9.69 | WATERMAIN | - |
| ULO14 | 205+70.33 | RT-20.32 | GAS | - |
| ULO15 | 205+60.36 | RT-29.83 | GAS | - |
| ULO16 | 205+29.72 | RT-36.35 | WATERMAIN | - |
| ULO17 | 205+09.25 | RT-21.44 | GAS | - |
| ULO18 | 205+01.09 | RT-9.17 | WATERMAIN | - |
| ULO19 | 204+81.95 | LT-3.95 | WATER LAT | - |
| ULO20 | 204+03.81 | RT-0.28 | WATER LAT | - |
| ULO21 | 203+32.29 | RT-0.07 | WATER LAT | - |
| ULO22 | 202+47.43 | LT-4.25 | WATER LAT | - |
| ULO23 | 201+86.34 | RT-9.86 | WATERMAIN | - |
| ULO24 | 201+81.69 | RT-20.16 | GAS | - |
| ULO25 | 201+81.06 | LT-12.43 | GAS | - |
| **GREEN LAKE PASS** | | | | |
| ULO26 | 107+60.28 | LT-10.20 | WATERMAIN | - |
| ULO27 | 107+76.33 | LT-14.50 | GAS | - |

## SPECIFIC NOTES

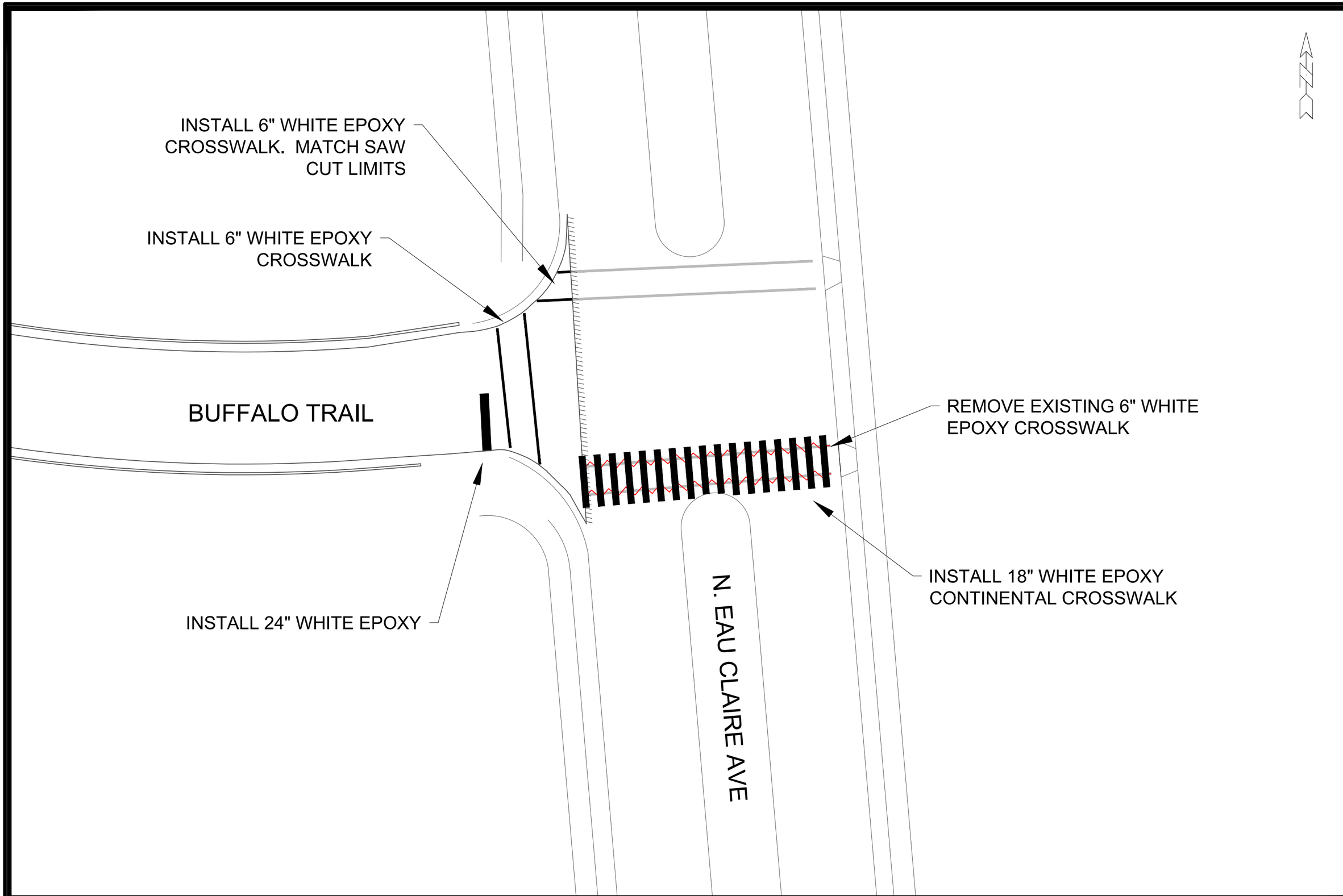


| MARK | REVISION | DATE | BY |
|---|---|---|---|
| -- | -- | -- | -- |
| -- | -- | -- | -- |
| -- | -- | -- | -- |
| -- | -- | -- | -- |

Designed By: NLJ | Date: 4/29/2025 1:50 PM | Scale: 1" = 20'

15123 | PM-1

BUFFALO TRAIL & N. EAU CLAIRE AVE - PAVEMENT MARKINGS 15123

BUFFALO TRAIL, BARRON COURT, GREEN LAKE PASS MADISON, WI

CONTRACT NO: 8806

M:\DESIGN\Projects\15123\CAD\Traffic\15123TE-PavementMarking.dwg

CITY OF MADISON WISCONSIN

15123

PM-1

202+25.00 DWY RT




202+75.00




203+12.80 DWY LT




202+00.00 BUFFALO TRAIL




202+50.00




203+00.00

| MARK | REVISION | DATE | BY |
|---|---|---|---|
| -- | -- | -- | -- |
| -- | -- | -- | -- |
| -- | -- | -- | -- |
| -- | -- | -- | -- |
| -- | -- | -- | -- |

Designed By: NIJ | Date: 7/31/2025 11:38 AM | Scale: 1" = 20'

15123

X-1

15123

MADISON, WI

CONTRACT NO: 8806

CROSS SECTIONS - BUFFALO TRAIL

BUFFALO TRAIL, BARRON COURT, GREEN LAKE PASS

M:\DESIGN\Projects\15123\CAD\Streets\15123EN-Corridor.dwg

CITY OF MADISON WISCONSIN

15123

X-1

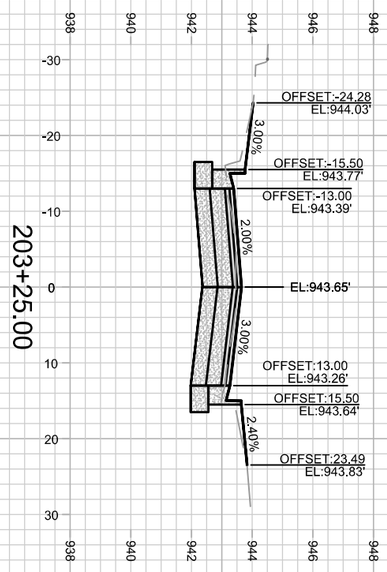


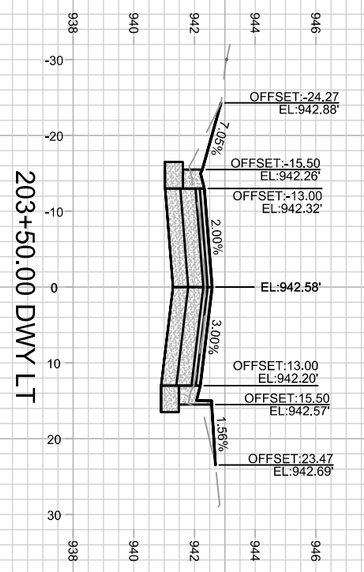


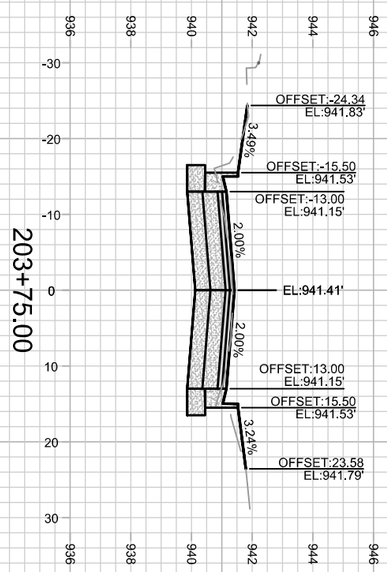


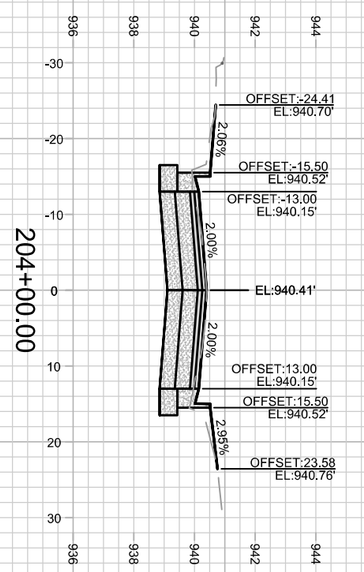


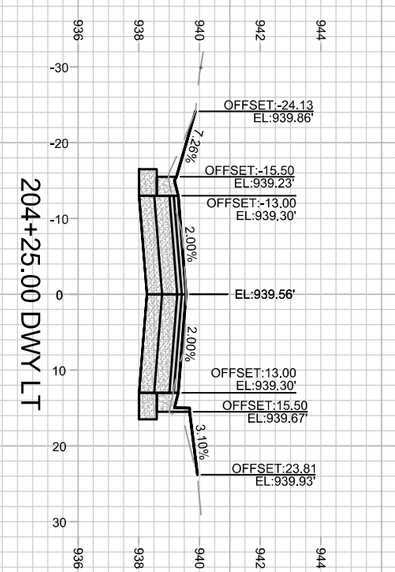


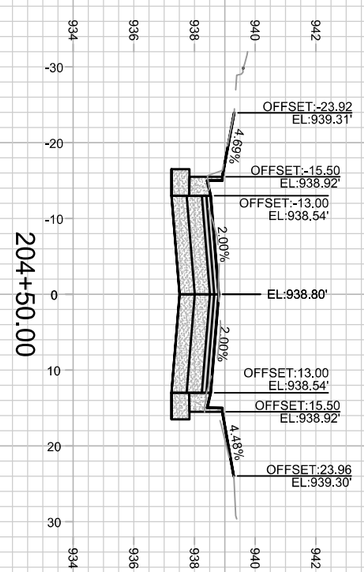


X-2

15123

CROSS SECTIONS - BUFFALO TRAIL 15123

BUFFALO TRAIL, BARRON COURT, GREEN LAKE PASS MADISON, WI

M:\DESIGN\Projects\15123\CAD\Streets\15123EN-Corridor.dwg CONTRACT NO: 8806

| MARK | REVISION | DATE | BY |
|---|---|---|---|
| --- | --- | --- | --- |
| --- | --- | --- | --- |
| --- | --- | --- | --- |
| --- | --- | --- | --- |

Designed By: NLJ | Date: 7/31/2025 11:38 AM | Scale: 1" = 20'

15123 X-2

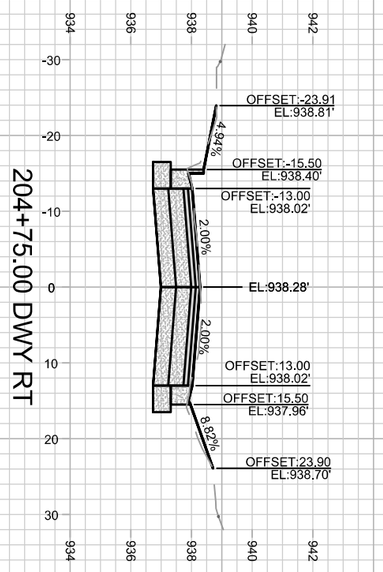


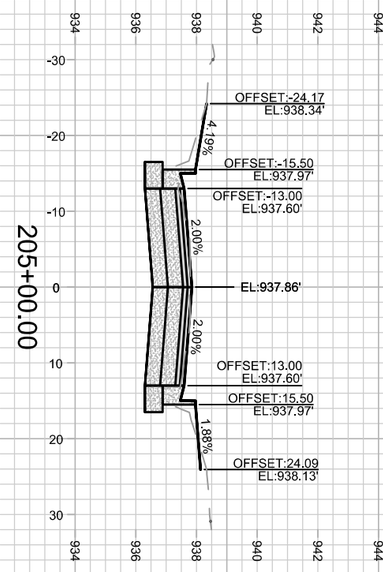


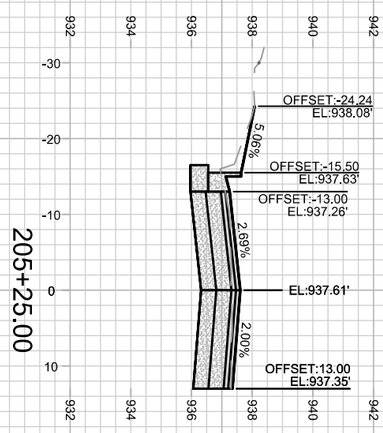


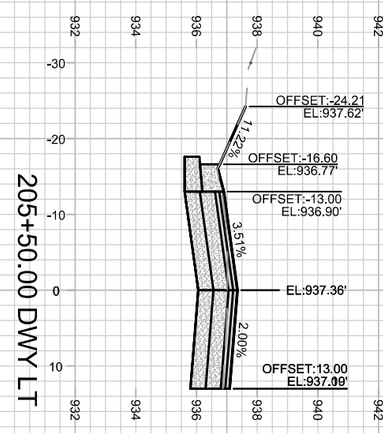


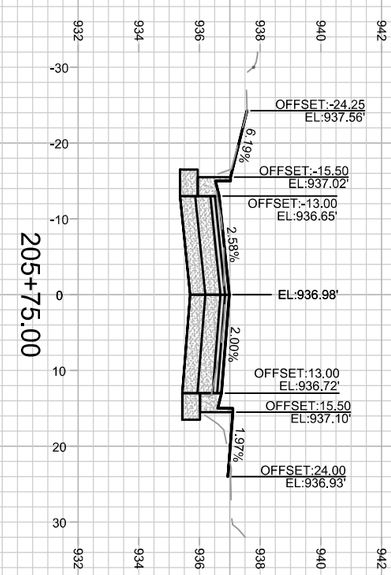


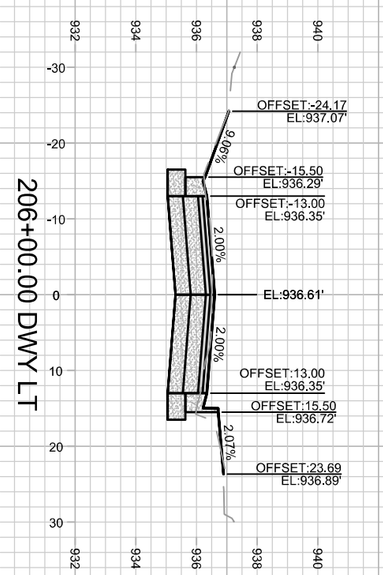


X-3

15123

CROSS SECTIONS - BUFFALO TRAIL 15123

BUFFALO TRAIL, BARRON COURT, GREEN LAKE PASS MADISON, WI

M:\DESIGN\Projects\15123\CAD\Streets\15123EN-Corridor.dwg CONTRACT NO: 8806

| MARK | REVISION | DATE | BY |
|---|---|---|---|
| --- | --- | --- | --- |
| --- | --- | --- | --- |
| --- | --- | --- | --- |
| --- | --- | --- | --- |

Designed By: NLJ | Date: 7/31/2025 11:38 AM | Scale: 1" = 20'

15123 X-3

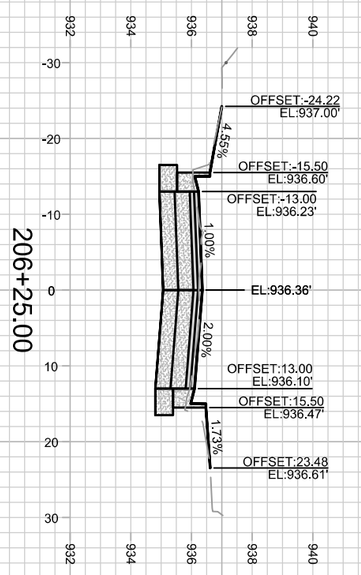


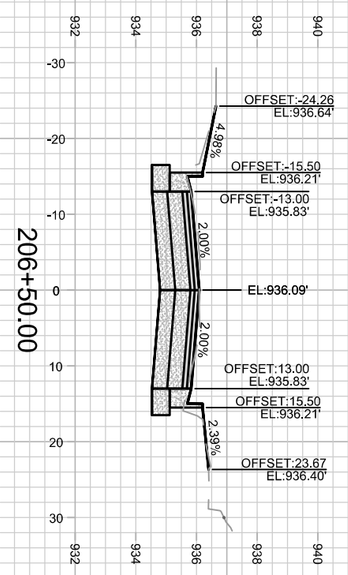


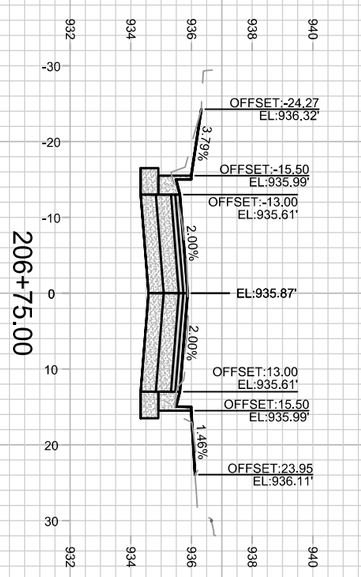


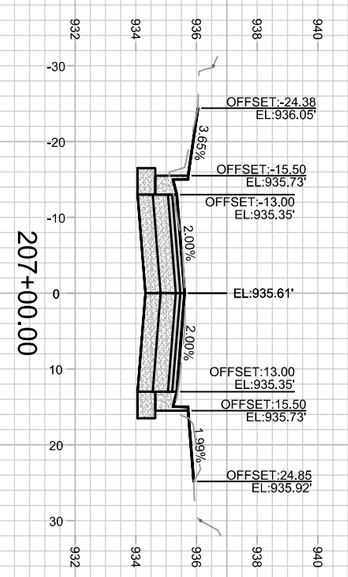


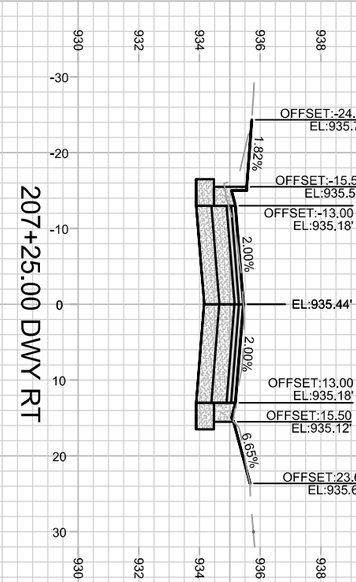


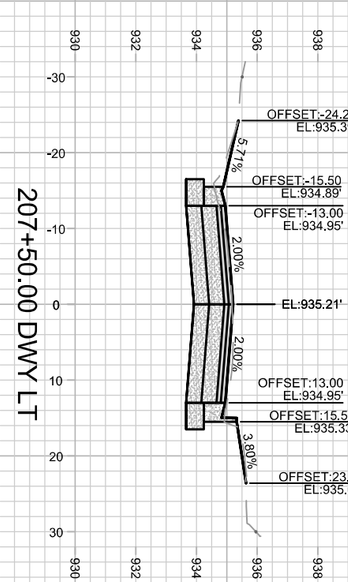


X-4

15123

CROSS SECTIONS - BUFFALO TRAIL 15123

BUFFALO TRAIL, BARRON COURT, GREEN LAKE PASS MADISON, WI

M:\DESIGN\Projects\15123\CAD\Streets\15123EN-Corridor.dwg CONTRACT NO: 8806

| MARK | REVISION | DATE | BY |
|---|---|---|---|
| --- | --- | --- | --- |
| --- | --- | --- | --- |
| --- | --- | --- | --- |
| --- | --- | --- | --- |

Designed By: NLJ | Date: 7/31/2025 11:38 AM | Scale: 1" = 20'

15123 X-4

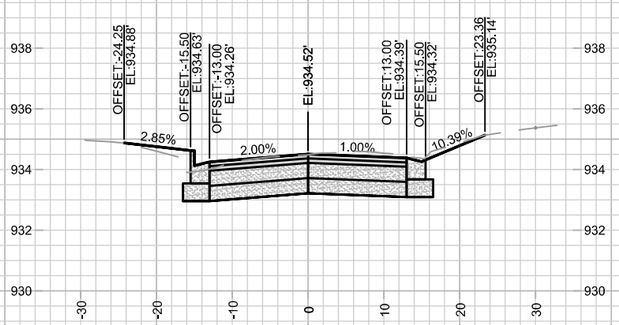


207+86.67 DWY RT

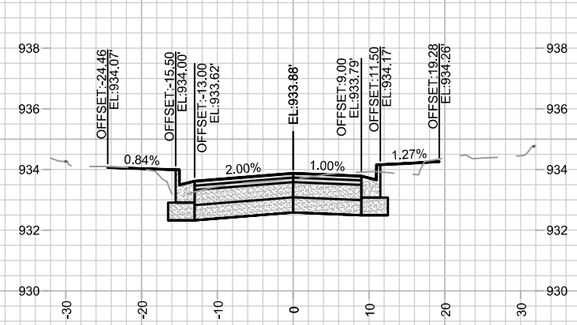


208+25.00

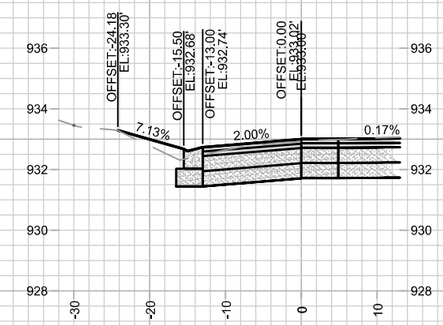


208+75.00 DWY LT

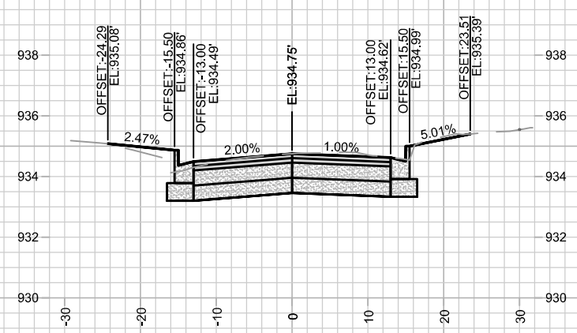


207+75.00

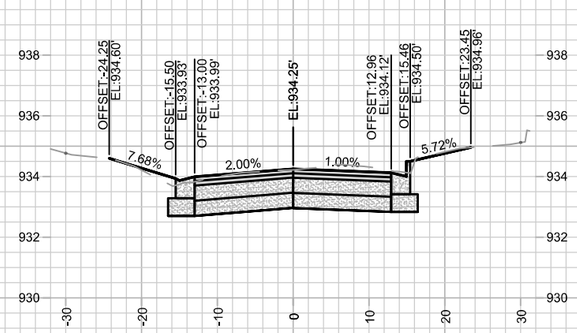


208+00.00 DWY LT

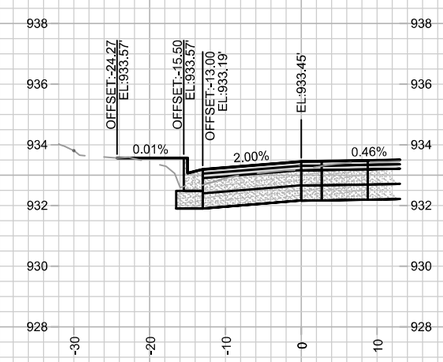


208+50.00

| MARK | REVISION | DATE | BY |
|---|---|---|---|
| -- | -- | -- | -- |
| -- | -- | -- | -- |
| -- | -- | -- | -- |
| -- | -- | -- | -- |

Designed By: NLJ | Date: 7/31/2025 11:38 AM | Scale: 1" = 20'

15123

X-5

15123

MADISON, WI

CONTRACT NO: 8806

CROSS SECTIONS - BUFFALO TRAIL

BUFFALO TRAIL, BARRON COURT, GREEN LAKE PASS

M:\DESIGN\Projects\15123\CAD\Streets\15123EN-Corridor.dwg

CITY OF MADISON WISCONSIN

15123

X-5

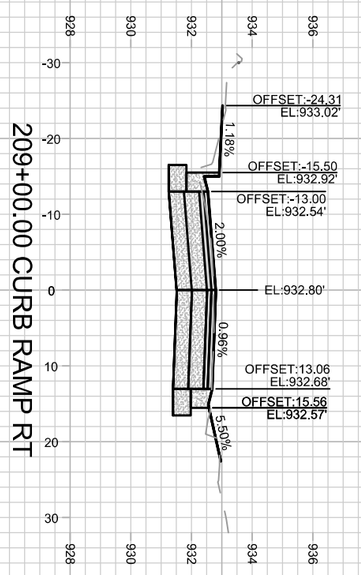


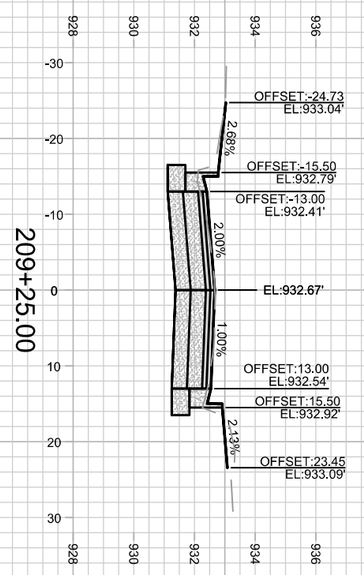


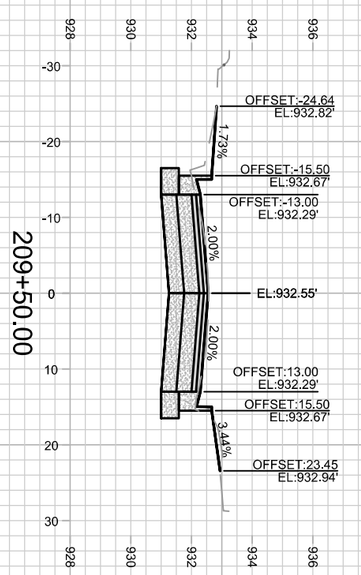


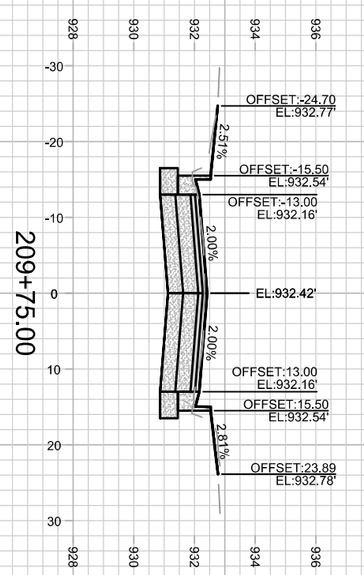


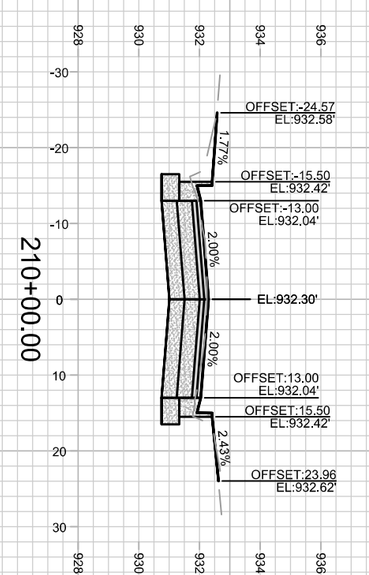


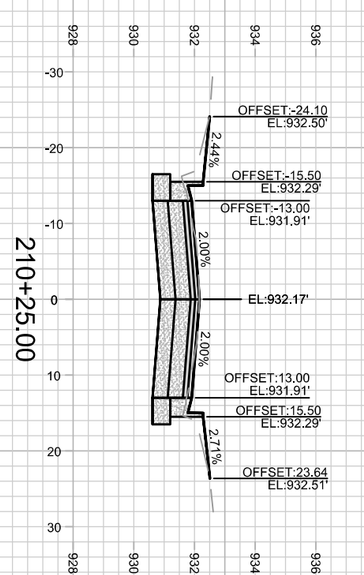


X-6

15123

CROSS SECTIONS - BUFFALO TRAIL 15123

BUFFALO TRAIL, BARRON COURT, GREEN LAKE PASS MADISON, WI

M:\DESIGN\Projects\15123\CAD\Streets\15123EN-Corridor.dwg CONTRACT NO: 8806

| MARK | REVISION | DATE | BY |
|---|---|---|---|
| --- | --- | --- | --- |
| --- | --- | --- | --- |
| --- | --- | --- | --- |
| --- | --- | --- | --- |

Designed By: NLJ | Date: 7/31/2025 11:38 AM | Scale: 1" = 20'

15123 X-6

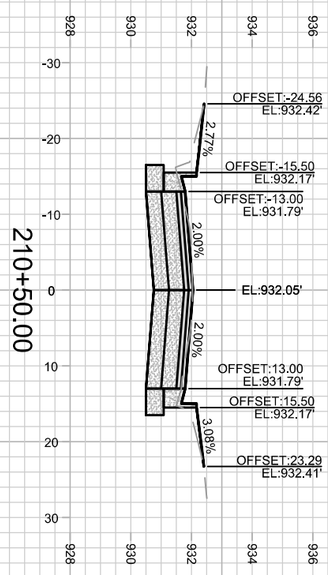


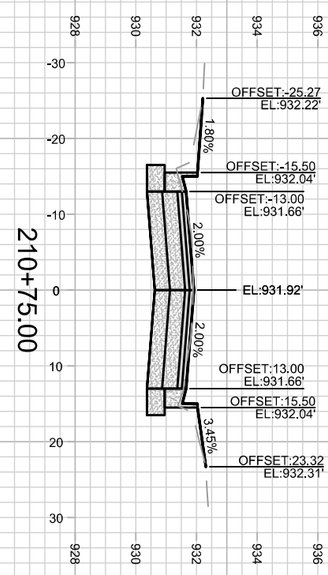


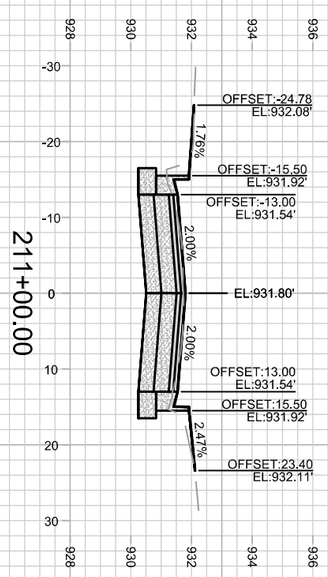


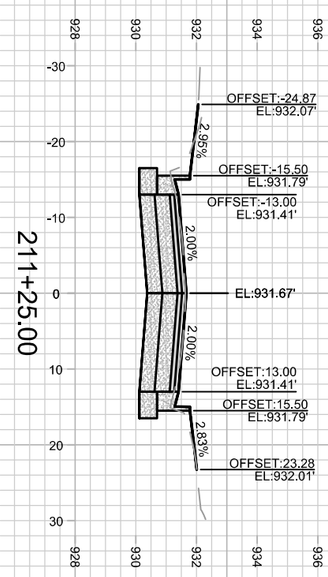


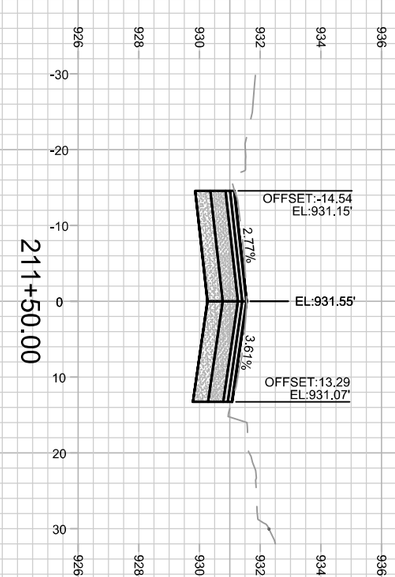


| | | | |
|---|---|---|---|
| CROSS SECTIONS - BUFFALO TRAIL | | 15123 | |
| BUFFALO TRAIL, BARRON COURT, GREEN LAKE PASS | | MADISON, WI | |
| M:\DESIGN\Projects\15123\CAD\Streets\15123EN-Corridor.dwg | CONTRACT NO: | 8806 | |

| MARK | REVISION | DATE | BY |
|---|---|---|---|
| --- | --- | --- | --- |
| --- | --- | --- | --- |
| --- | --- | --- | --- |
| --- | --- | --- | --- |

| | | |
|---|---|---|
| Designed By: NLJ | Date: 7/31/2025 11:38 AM | Scale: 1" = 20' |
| 15123 | | X-7 |

15123
X-7

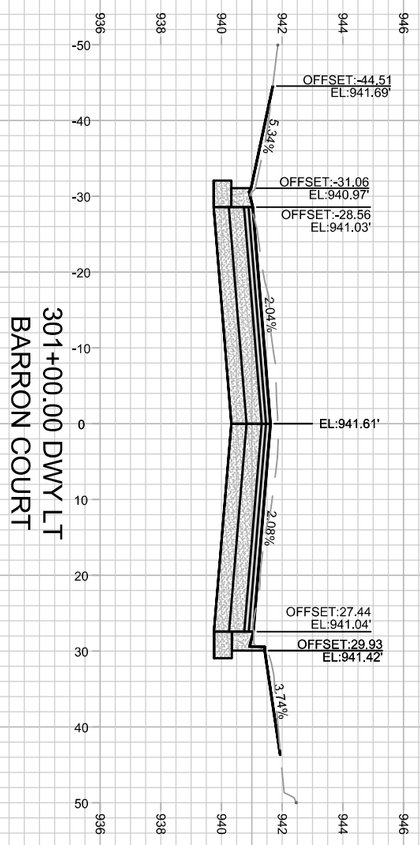


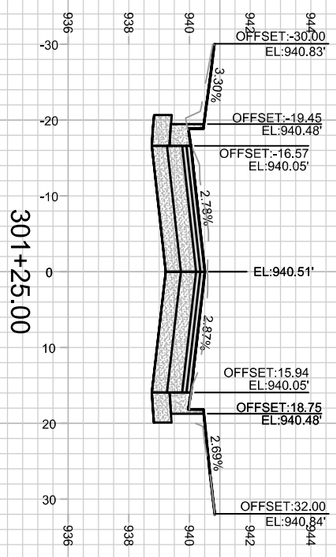


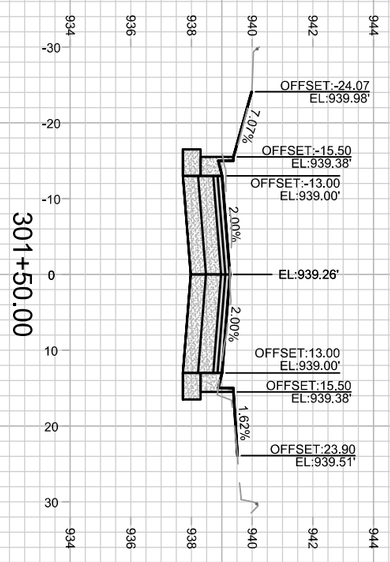


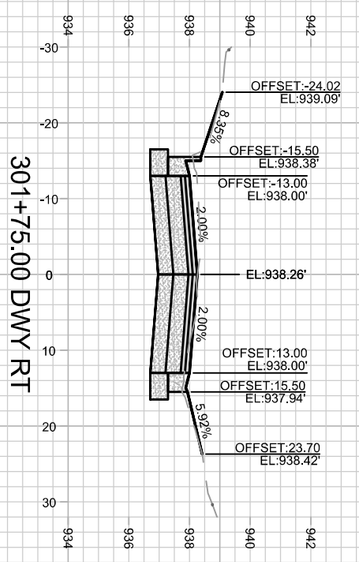


X-8

15123

CROSS SECTIONS - BARRON COURT 15123

BUFFALO TRAIL, BARRON COURT, GREEN LAKE PASS MADISON, WI

M:\DESIGN\Projects\15123\CAD\Streets\15123EN-Corridor.dwg CONTRACT NO: 8806

| MARK | REVISION | DATE | BY |
|---|---|---|---|
| --- | --- | --- | --- |
| --- | --- | --- | --- |
| --- | --- | --- | --- |
| --- | --- | --- | --- |

Designed By: NLJ | Date: 7/31/2025 11:39 AM | Scale: 1" = 20'

15123 X-8

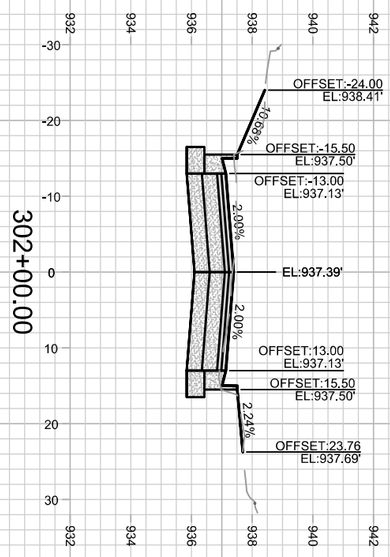


| | | | |
|---|---|---|---|
| CROSS SECTIONS - BARRON COURT | | 15123 | |
| BUFFALO TRAIL, BARRON COURT, GREEN LAKE PASS | | MADISON, WI | |
| M:\DESIGN\Projects\15123\CAD\Streets\15123EN-Corridor.dwg | CONTRACT NO: | 8806 | |

| MARK | REVISION | DATE | BY |
|---|---|---|---|
| --- | --- | --- | --- |
| --- | --- | --- | --- |
| --- | --- | --- | --- |
| --- | --- | --- | --- |

| | | |
|---|---|---|
| Designed By: NLJ | Date: 7/31/2025 11:39 AM | Scale: 1" = 20' |
| 15123 | | X-9 |

15123

X-9

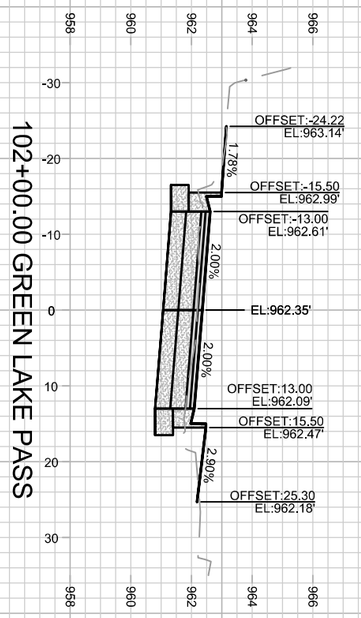


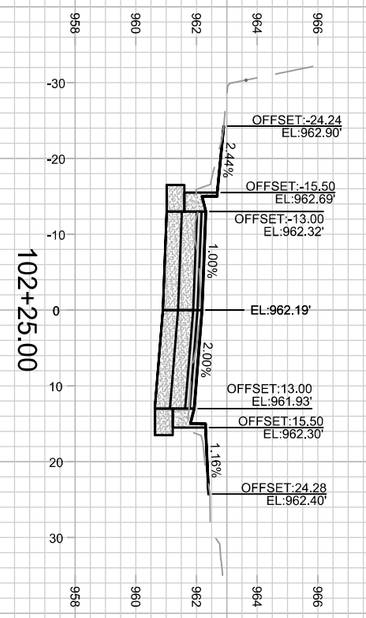


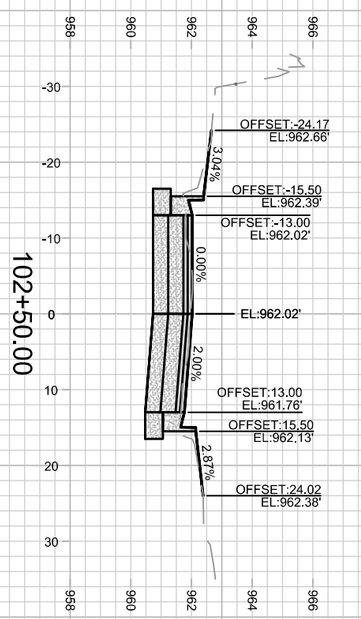


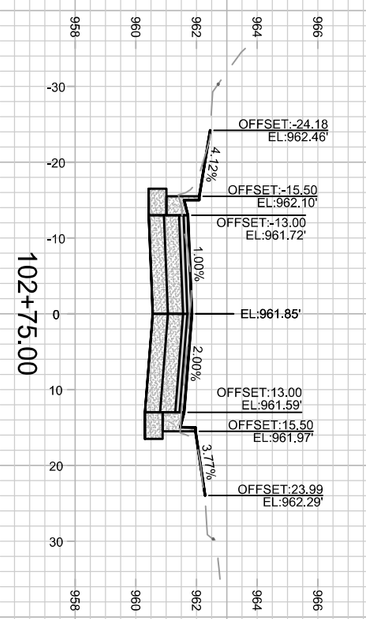


X-10

15123

CROSS SECTIONS - GREEN LAKE PASS 15123

BUFFALO TRAIL, BARRON COURT, GREEN LAKE PASS MADISON, WI

M:\DESIGN\Projects\15123\CAD\Streets\15123EN-Corridor.dwg CONTRACT NO: 8806

| MARK | REVISION | DATE | BY |
|---|---|---|---|
| --- | --- | --- | --- |
| --- | --- | --- | --- |
| --- | --- | --- | --- |
| --- | --- | --- | --- |

Designed By: NLJ | Date: 7/31/2025 11:39 AM | Scale: 1" = 20'

15123 X-10

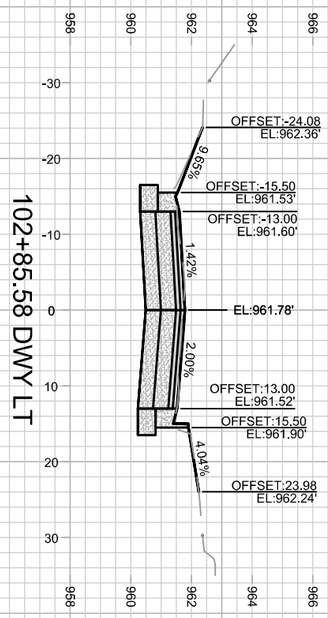


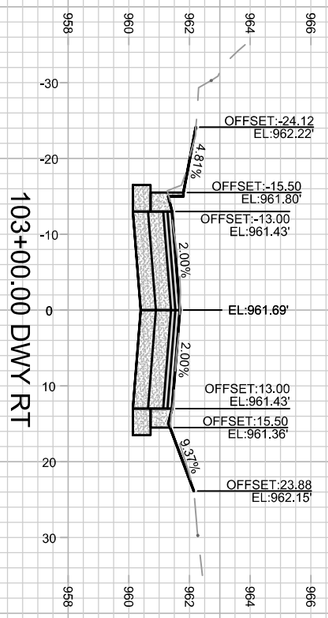


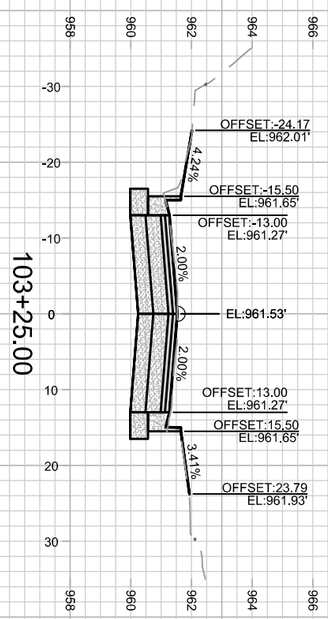


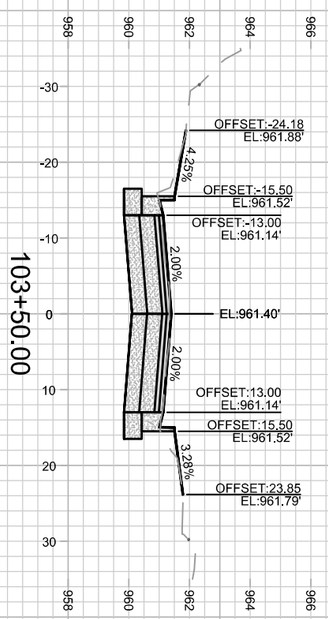


X-11

15123

CROSS SECTIONS - GREEN LAKE PASS 15123

BUFFALO TRAIL, BARRON COURT, GREEN LAKE PASS MADISON, WI

M:\DESIGN\Projects\15123\CAD\Streets\15123EN-Corridor.dwg CONTRACT NO: 8806

| MARK | REVISION | DATE | BY |
|---|---|---|---|
| --- | --- | --- | --- |
| --- | --- | --- | --- |
| --- | --- | --- | --- |
| --- | --- | --- | --- |

Designed By: NLJ | Date: 7/31/2025 11:39 AM | Scale: 1" = 20'

15123 X-11

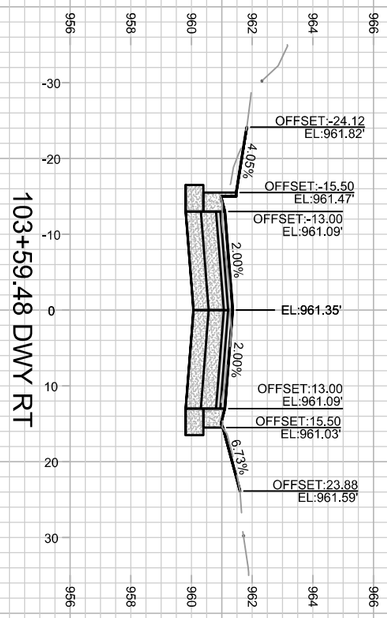


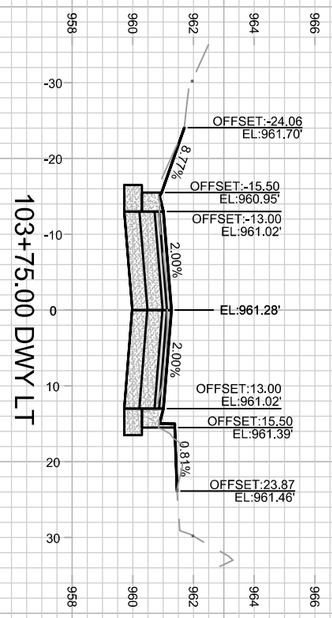


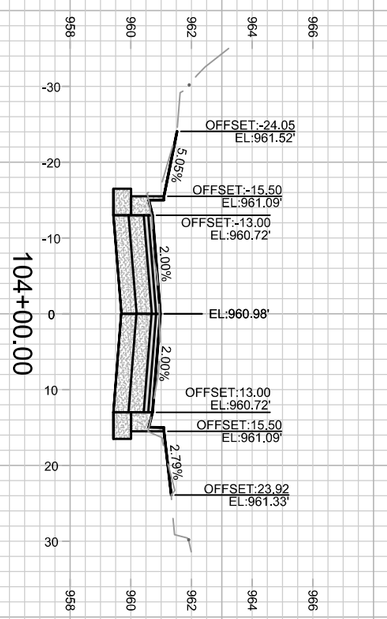


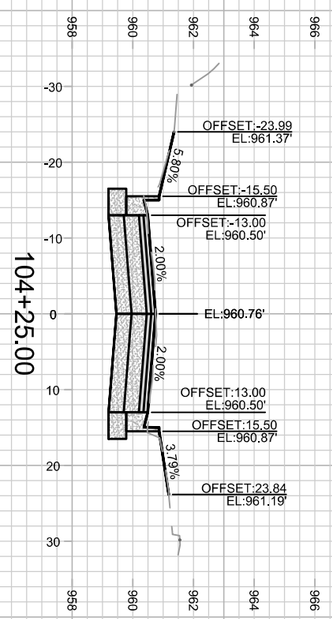


| | | | |
|---|---|---|---|
| CROSS SECTIONS - GREEN LAKE PASS | | 15123 | |
| BUFFALO TRAIL, BARRON COURT, GREEN LAKE PASS | | MADISON, WI | |
| M:\DESIGN\Projects\15123\CAD\Streets\15123EN-Corridor.dwg | CONTRACT NO: | 8806 | |

| MARK | REVISION | DATE | BY |
|---|---|---|---|
| --- | --- | --- | --- |
| --- | --- | --- | --- |
| --- | --- | --- | --- |
| --- | --- | --- | --- |

Designed By: NLJ | Date: 7/31/2025 11:39 AM | Scale: 1" = 20'

15123 | X-12

15123
X-12

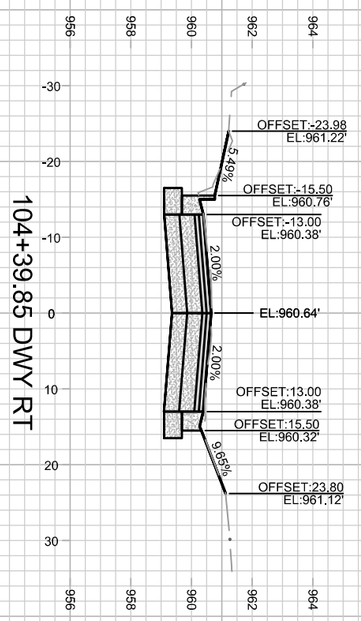


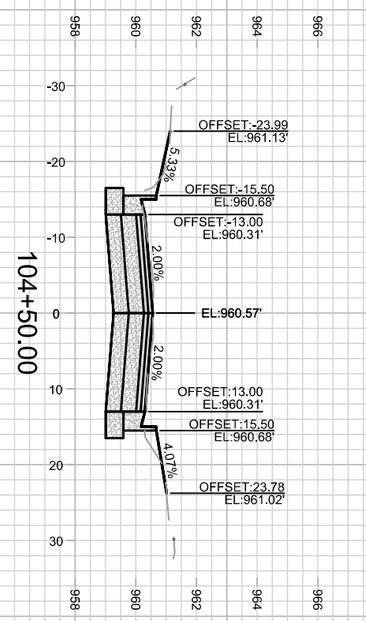


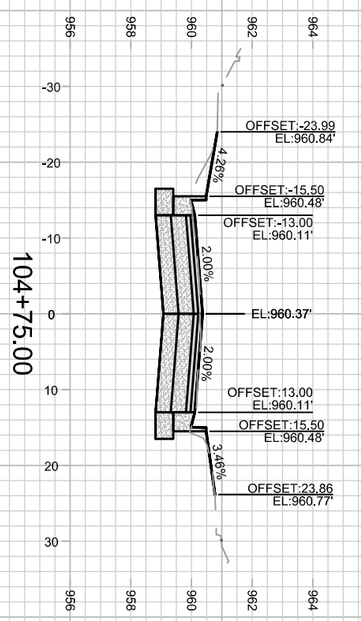


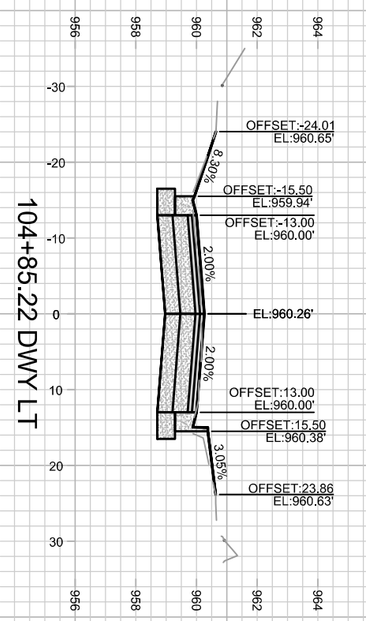


15123
X-13

CROSS SECTIONS - GREEN LAKE PASS 15123

BUFFALO TRAIL, BARRON COURT, GREEN LAKE PASS MADISON, WI

M:\DESIGN\Projects\15123\CAD\Streets\15123EN-Corridor.dwg CONTRACT NO: 8806

| MARK | REVISION | DATE | BY |
|---|---|---|---|
| --- | --- | --- | --- |
| --- | --- | --- | --- |
| --- | --- | --- | --- |
| --- | --- | --- | --- |

Designed By: NLJ | Date: 7/31/2025 11:39 AM | Scale: 1" = 20'

15123 X-13

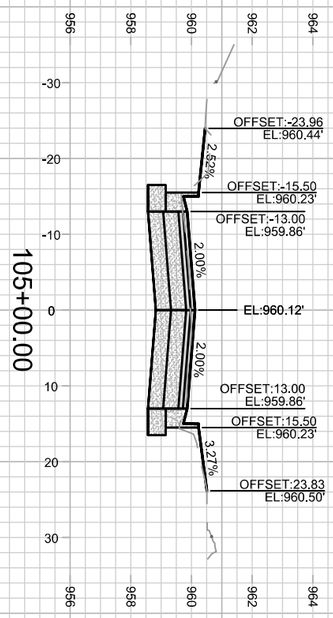


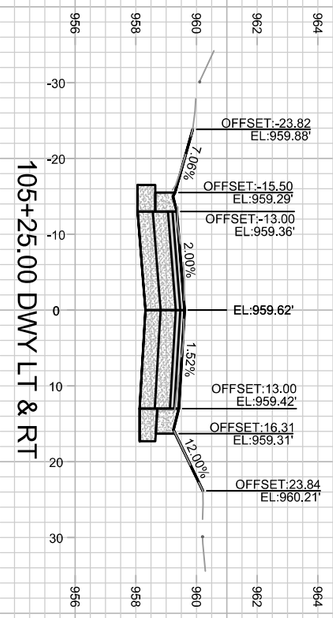


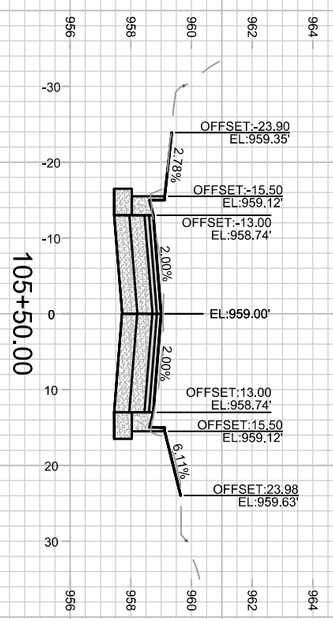


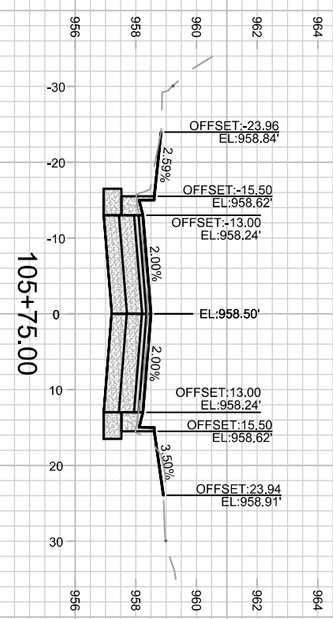


X-14

15123

CROSS SECTIONS - GREEN LAKE PASS 15123

BUFFALO TRAIL, BARRON COURT, GREEN LAKE PASS MADISON, WI

M:\DESIGN\Projects\15123\CAD\Streets\15123EN-Corridor.dwg CONTRACT NO: 8806

| MARK | REVISION | DATE | BY |
|---|---|---|---|
| --- | --- | --- | --- |
| --- | --- | --- | --- |
| --- | --- | --- | --- |
| --- | --- | --- | --- |

Designed By: NLJ | Date: 7/31/2025 11:39 AM | Scale: 1" = 20'

15123 X-14

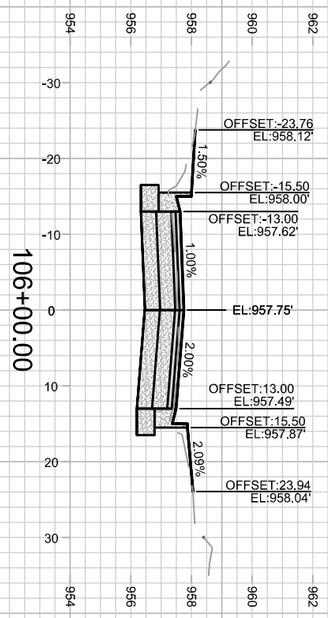


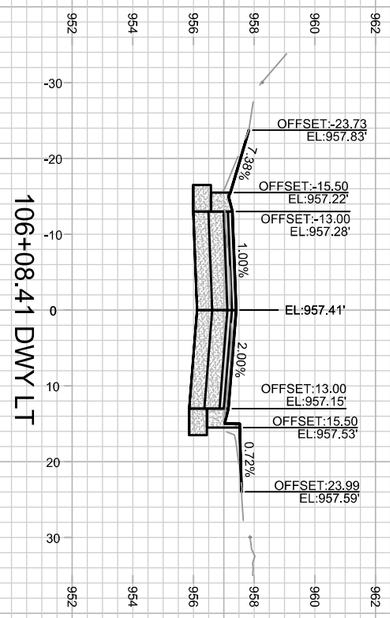


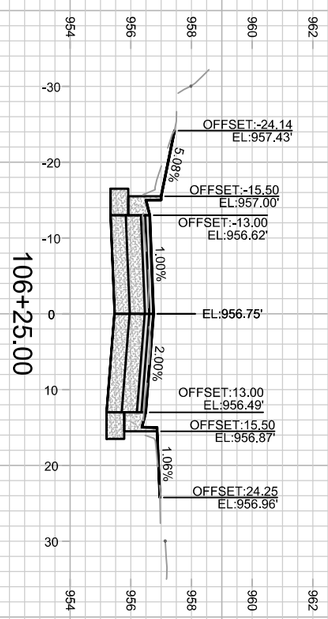


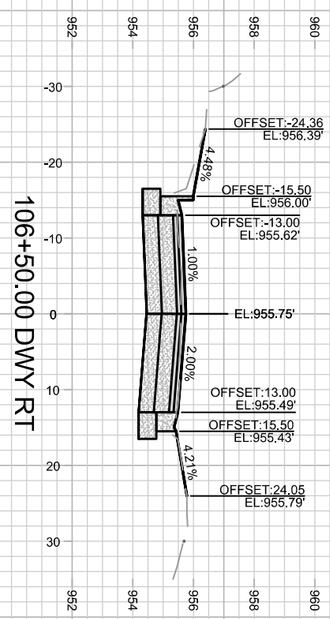


15123
X-15

CROSS SECTIONS - GREEN LAKE PASS 15123

BUFFALO TRAIL, BARRON COURT, GREEN LAKE PASS MADISON, WI

M:\DESIGN\Projects\15123\CAD\Streets\15123EN-Corridor.dwg CONTRACT NO: 8806

| MARK | REVISION | DATE | BY |
|---|---|---|---|
| --- | --- | --- | --- |
| --- | --- | --- | --- |
| --- | --- | --- | --- |
| --- | --- | --- | --- |

Designed By: NLJ | Date: 7/31/2025 11:39 AM | Scale: 1" = 20'

15123 X-15

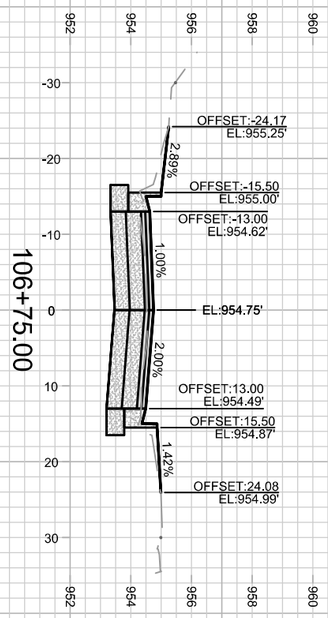


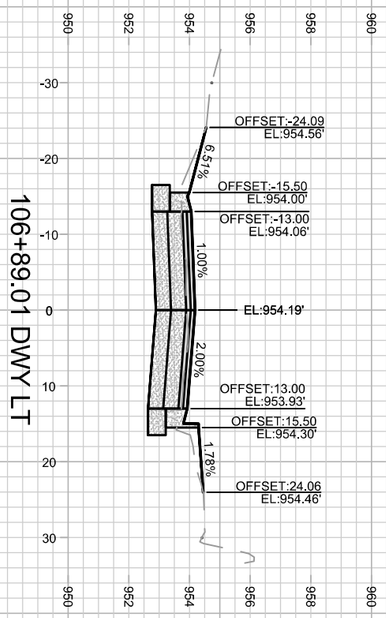


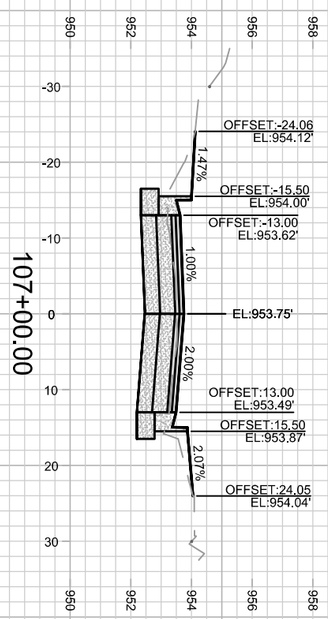


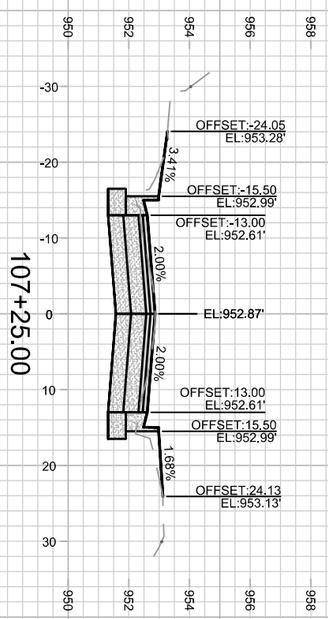


X-16

15123

CROSS SECTIONS - GREEN LAKE PASS 15123

BUFFALO TRAIL, BARRON COURT, GREEN LAKE PASS MADISON, WI

M:\DESIGN\Projects\15123\CAD\Streets\15123EN-Corridor.dwg CONTRACT NO: 8806

| MARK | REVISION | DATE | BY |
|---|---|---|---|
| --- | --- | --- | --- |
| --- | --- | --- | --- |
| --- | --- | --- | --- |
| --- | --- | --- | --- |

Designed By: NLJ | Date: 7/31/2025 11:39 AM | Scale: 1" = 20'

15123 X-16

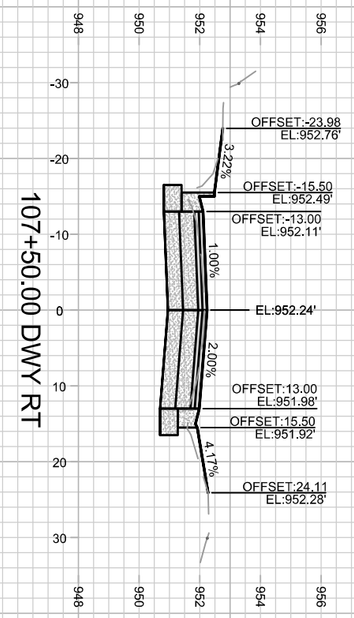


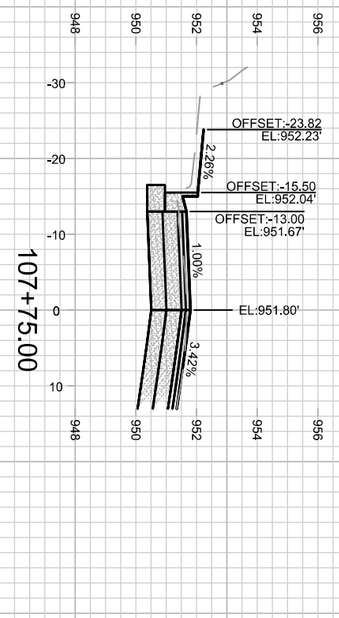


| | | | |
|---|---|---|---|
| CROSS SECTIONS - GREEN LAKE PASS | | 15123 | |
| BUFFALO TRAIL, BARRON COURT, GREEN LAKE PASS | | MADISON, WI | |
| M:\DESIGN\Projects\15123\CAD\Streets\15123EN-Corridor.dwg | CONTRACT NO: | 8806 | |

| MARK | REVISION | DATE | BY |
|---|---|---|---|
| --- | --- | --- | --- |
| --- | --- | --- | --- |
| --- | --- | --- | --- |
| --- | --- | --- | --- |

| | | |
|---|---|---|
| Designed By: NLJ | Date: 7/31/2025 11:39 AM | Scale: 1" = 20' |
| 15123 | | X-17 |

15123

X-17